HEWLETT PACKARD

AUTORANGING SYSTEM DC POWER SUPPLY HP MODEL 6038A

OPERATING AND SERVICE MANUAL FOR HP 6038A WITH SERIAL NUMBERS 02749A-03866 AND ABOVE

For instruments with higher Serial Numbers
a change page may be included.

HP Part No. 06038-90003
Microfiche Part No. 06038-90004

Printed: December, 1987

SAFETY SUMMARY

The following general safety precautions must be observed during all phases of operation, service, and repair of this instrument. Failure to comply with these precautions or with specific warnings elsewhere in this manual violates safety standards of design, manufacture, and intended use of the instrument. Hewlett-Packard Company assumes no liability for the customer's failure to comply with these requirements.

BEFORE APPLYING POWER.

Verify that the product is set to match the available line voltage and the correct fuse is installed.

GROUND THE INSTRUMENT.

This product is a Safety Class 1 instrument (provided with a protective earth terminal). To minimize shock hazard, the instrument chassis and cabinet must be connected to an electrical ground. The instrument must be connected to the ac power supply mains through a three-conductor power cable, with the third wire firmly connected to an electrical ground (safety ground) at the power outlet. For instruments designed to be hard-wired to the ac power lines (supply mains), connect the protective earth terminal to a protective conductor before any other connection is made. Any interruption of the protective (grounding) conductor or disconnection of the protective earth terminal will cause a potential shock hazard that could result in personal injury. If the instrument is to be energized via an external autotransformer for voltage reduction, be certain that the autotransformer common terminal is connected to the neutral (earthed pole) of the ac power lines (supply mains).

INPUT POWER MUST BE SWITCH CONNECTED.

For instruments without a built-in line switch, the input power lines must contain a switch or another adequate means for disconnecting the instrument from the ac power lines (supply mains).

DO NOT OPERATE IN AN EXPLOSIVE ATMOSPHERE.

Do not operate the instrument in the presence of flammable gases or fumes.

KEEP AWAY FROM LIVE CIRCUITS.

Operating personnel must not remove instrument covers. Component replacement and internal adjustments must be made by qualified service personnel. Do not replace components with power cable connected. Under certain conditions, dangerous voltages may exist even with the power cable removed. To avoid injuries, always disconnect power, discharge circuits and remove external voltage sources before touching components.

DO NOT SERVICE OR ADJUST ALONE.

Do not attempt internal service or adjustment unless another person, capable of rendering first aid and resuscitation, is present.

DO NOT EXCEED INPUT RATINGS.

This instrument may be equipped with a line filter to reduce electromagnetic interference and must be connected to a properly grounded receptacle to minimize electric shock hazard. Operation at line voltages or frequencies in excess of those stated on the data plate may cause leakage currents in excess of 5.0 mA peak.

SAFETY SYMBOLS.

⚠	Instruction manual symbol: the product will be marked with this symbol when it is necessary for the user to refer to the instruction manual (refer to Table of Contents).
⚡	Indicates hazardous voltages.
⏚ or ⊥	Indicate earth (ground) terminal.
WARNING	The WARNING sign denotes a hazard. It calls attention to a procedure, practice, or the like, which, if not correctly performed or adhered to, could result in personal injury. Do not proceed beyond a WARNING sign until the indicated conditions are fully understood and met.
CAUTION	The CAUTION sign denotes a hazard. It calls attention to an operating procedure, or the like, which, if not correctly performed or adhered to, could result in damage to or destruction of part or all of the product. Do not proceed beyond a CAUTION sign until the indicated conditions are fully understood and met.

DO NOT SUBSTITUTE PARTS OR MODIFY INSTRUMENT.

Because of the danger of introducing additional hazards, do not install substitute parts or perform any unauthorized modification to the instrument. Return the instrument to a Hewlett-Packard Sales and Service Office for service and repair to ensure that safety features are maintained.

Instruments which appear damaged or defective should be made inoperative and secured against unintended operation until they can be repaired by qualified service personnel.

CONTENTS

Section I
GENERAL INFORMATION

1-1 INTRODUCTION 1-1
1-3 DESCRIPTION 1-1
1-12 SAFETY CONSIDERATIONS 1-1
1-14 SPECIFICATIONS 1-1
1-16 OPTIONS 1-1
1-18 ACCESSORIES 1-2
1-20 INSTRUMENT AND MANUAL IDENTIFICATION ... 1-2
1-23 HP-IB INTERCONNECTION CABLES AND CONNECTORS 1-3
1-26 ORDERING ADDITIONAL MANUALS 1-3
1-28 RELATED DOCUMENTS 1-3
1-30 HP-IB COMPATIBILITY 1-3

Section II
INSTALLATION

2-1 INTRODUCTION 2-1
2-3 INITIAL INSPECTION 2-1
2-5 Mechanical Check 2-1
2-7 Electrical Check 2-1
2-9 PREPARATION FOR USE 2-2
2-11 Location and Cooling 2-2
2-13 Outline Diagram 2-2
2-15 Bench Operation 2-2
2-17 Rack Mounting 2-2
2-19 Input Power Requirements 2-2
2-21 Power Connection 2-2
2-25 LINE VOLTAGE OPTION CONVERSION 2-2
2-27 REPACKAGING FOR SHIPMENT 2-3

Section III
OPERATING INSTRUCTIONS

3-1 INTRODUCTION 3-1
3-3 CDNTRDLS AND INDICATDRS 3-1
3-5 OUTPUT RANGE FOR AN AUTORANGING POWER SUPPLY 3-1
3-12 TURN-ON CHECKOUT PROCEOURE 3-4
3-18 INITIAL SETUP AND INTERCONNECTIONS 3-5
3-19 Connecting the Load 3-5
3-31 Overvoltage Protection (OVP) 3-7
3-35 Foldback Protection 3-8
3-40 Remote Voltage Sensing 3-8
3-46 Mode Switches 3-9
3-49 HP-IB 3-9
3-54 Monitor Signals 3-10
3-56 Protective Circuits 3-10
3-65 LOCAL OPERATION 3-10
3-69 Constant Voltage Operation 3-11
3-71 Constant Current Operation 3-11
3-73 Return to Local 3-11
3-76 HP-IB OPERATION 3-11
3-77 Interface Functions 3-11
3-91 HP-IB Address Selection 3-13
3-97 Power-Dn Service Request 3-13
3-100 Initial Conditions 3-14
3-102 Programming Syntax 3-14
3-194 ANALOG PROGRAMMING 3-25
3-207 MULTIPLE-SUPPLY OPERATION 3-27
3-209 Auto-Parallel Operation 3-27
3-219 Series Operation 3-28
3-221 Fault Indicator (FLT) and Remote Inhibit (INH) ... 3-29

Section IV
PRINCIPLES OF OPERATION

4-1 INTRODUCTION 4-1
4-7 HP-IB BOARD 4-1
4-9 HP-IB Transceivers and Interface Circuits 4-1
4-11 Microprocessor and Clock Circuits 4-1
4-15 Data Bus Latches and Free-Run Jumper 4-1
4-18 Address Decoding 4-2
4-21 Memory Circuits 4-2
4-24 Start-Up Circuits 4-4
4-26 Address Switches 4-4
4-29 Test LEDs 4-4
4-31 Real-Time Clock 4-4
4-33 Serializer 4-4
4-43 Fault Indicator (FLT) Circuit 4-5
4-46 Remote Inhibit (INH) Circuit 4-5
4-48 POWER SUPPLY INTERFACE (PSI) BOARD 4-5
4-52 Isolation 4-5
4-54 Control Lines Output Port 4-5
4-56 Address Latches and Decoders 4-5
4-59 Output Latches 4-5
4-62 Current and Voltage OACs 4-7
4-65 Analog Multiplexer 4-7
4-67 Successive Approximation A-to-D Converter 4-7
4-69 A-To-D Input Port 4-7
4-72 Status Lines Input Port 4-7
4-74 Identification Input Port 4-7
4-78 Power Clear 4-7
4-80 FRONT PANEL BOARD 4-7
4-82 Address Latches and Decoders 4-8
4-84 Volts and Amps Output Ports and Displays 4-8
4-87 RPG and Latches 4-8
4-90 Front-Panel Controls Input Port 4-8
4-92 Mode Indicators 4-8
4-94 OVP ADJUST CONTROL 4-8
4-96 Power Clear 4-8
4-98 POWER MESH AND CONTROL BOARD 4-8
4-100 AUTORANGING POWER 4-8
4-102 BLOCK DIAGRAM OVERVIEW 4-9
4-110 SIMPLIFIED SCHEMATIC 4-10

CONTENTS (Cont.)

4-112 AC Turn-On Circuits....4-12
4-116 DC-To-DC Converter....4-12
4-121 Down Programmer....4-12
4-124 Bleeder Circuit....4-12
4-127 Constant-Voltege (CV) Circuit....4-12
4-132 Constant-Current (CC) Circuit....4-13
4-137 Overvoltage Protection (OVP) Circuit....4-13
4-139 Power-Limit Comperetor....4-13
4-142 Control-Voltage Comparetor....4-13
4-145 Initial-Ramp Circuit....4-14
4-147 Pulse-Width Modulator (PWM)....4-14
4-150 Bias Voltage Detector....4-14
4-152 AC Surge & Dropout Detector....4-16
4-155 1 Second Delay Circuit....4-16

Section V
MAINTENANCE

5-1 INTRODUCTION....5-1
5-3 TEST EOUIPMENT REOUIRED....5-1
5-5 OPERATION VERIFICATION TESTS....5-1
5-7 CALIBRATION PROCEDURE....5-1
5-9 Initial Setup....5-4
5-10 Voltage Monitor Zero Calibration....5-5
5-11 Common Mode Calibration....5-5
5-12 Remote Readback Zero Calibration....5-5
5-13 Constant Voltage Full Scale Calibration....5-6
5-14 Voltage Monitor and Remote Readback Full Scale Calibration....5-6
5-15 Constant Voltage Zero Calibration....5-6
5-16 Current Montior Zero Calibation....5-6
5-17 Constant Current Zero Calibration....5-6
5-1B Current Montior Full Scale Calibration....5-6
5-19 Constant Current Full Scale Calibration....5-6
5-20 Power Limit Calibration....5-7
5-21 Resistance Programming Full Scale Calibration....5-7
5-22 PERFORMANCE TESTS....5-7
5-24 Measurement Techniques....5-7
5-30 Constant Voltage (CV) Tests....5-B
5-45 Constant Current (CC) Tests....5-11
5-51 TROUBLESHOOTING....5-13
5-56 Initiel Troubleshooting Procedures....5-13
5-58 Electrostetic Protection....5-13
5-60 Repair end Replecement....5-14
5-68 A2 Control Board Removal....5-15
5-71 A4 Power Mesh Board Removal....5-15
5-74 A7 PSI Board/A8 HP-IB Board Removal....5-15
5-80 A1 Front-Panel Board Removal....5-15
5-84 Troubleshooting Procedure....5-16
5-87 Using the Symptioms Table....5-16
5-89 Using the HP-IB Section Symptom Table....5-16
5-94 HP-IB Section Troubleshooting....5-17
5-100 SIGNATURE ANALYSIS....5-21
5-104 HP-IB end PSI Boerd Test Setup....5-22
5-107 Powar Section Troubleshooting....5-64
5-111 Main Troubleshooting Setup....5-64
5-115 Troubleshooting No-Output Failures....5-65
5-117 Power Section Blocks....5-65
5-119 Troubleshooting No-Output Feilures....5-65
5-125 Troubleshooting DC-To-OC Converter....5-68
5-132 Troubleshooting Bias Supplies....5-68
5-152 Troubleshooting Down Programmer....5-70
5-157 Troubleshooting CV Circuit....5-71
5-163 Troublehshooting CC Circuit....5-71
5-170 Troubleshooting OVP Circuit....5-71
5-175 Troubleshooting PWM & Clock....5-72

Section VI
REPLACEABLE PARTS

6-1 INTRODUCTION....6-1
6-4 ORDERING INFORMATION....6-1

Section VII
COMPONENT LOCATION ILLUSTRATIONS AND CIRCUIT DIAGRAM

Appendix A
100 VAC INPUT POWER OPTION 100

Appendix B
LOGIC SYMBOLOGY

Appendix D
BLANK FRONT PANEL

Appendix E
CONTROL INTERFACE INTERMEDIATE LANGUAGE (CIIL)

Section 1
GENERAL INFORMATION

1-1 INTRODUCTION

1-2 This opereting end service menuel conteins e description of the HP Model 6038A System Power Supply, including specifications, instelletion and oparating instructions, theory of operation, maintenence procedures and schematics. Programming Note, part number 5952-4119, provides programming instructions and examples for the Hewlett-Packard series 200 computers (9816, 9920, 9826, 9836, 9836C).

1-3 DESCRIPTION

1-4 The HP 6038A is a 200 W autoranging HP-IB power supply with maximum ratings of 60 V and 10 A. It uses power MOSFETs in a 20 kHz switching converter to provide an autoranging output characteristic with laboratory performance. Output voltage and current are continuously indicated on individual meters. LED indicators show the complete operating state of the unit. Front-panel controls allow the user to set output voltage, current and overvoltage protection trip level. Overvoltage protection (OVP) protects the user's load by quickly and automatically interrupting energy transfer if a preset trip voltage is exceeded. Foldback protection can be selected to disable the power supply output if the unit switches from Constant Voltage (CV) to Constant Current (CC) mode or vice-versa. Control Interface Intermediate Language (CIIL) is available as an option.

1-5 The HP 6038A can be programmed directly to output volts and amps. The HP Power Supply can be both a listener and talker on the HP-IB and status can be read back to the controller over the HP-IB. The power supply can be programmed directly in volts and amps. Power supply status can be read over the HP-IB, and the power supply can be instructed to request service for any of nine conditions. Upon command, the power supply will measure its output voltage, output current, or OVP trip voltege end put the value on the HP-IB. New output values can be put on hold and triggered later, ellowing the controller to synchronize multiple units at one time.

1-6 The following persmeters and features can be controlled via the HP-IB:

- Output voltage setting (12 bits)
- Output current setting (12 bits)
- Trigger (update output)
- Output disable/enable
- OVP reset
- "Soft" voltage and current limits
- Status reporting
- Service request capability
- Foldback protection
- Output voltage measurement (12 bits)
- Output current measurement (12 bits)
- OVP setting measurement
- Mechine state initielization
- 16 mechine stete presets
- Self test

1-7 Output connections are made to reer-penel screw-on terminels. Either the positive or negative output terminel may be grounded or the output may be floated up to +240 Vdc (including output voltage) from chassis ground. Output voltage can be locally or remotely sensed.

1-B The HP 6038A is considerably smaller, lighter and more efficient than older-design supplies with similar output power capability. The unit is fan cooled and is packaged in a Hewlett-Packard System II-compatible modular enclosure which is sturdy, attractive and provides easy access for servicing.

1-9 A fault indicator (FLT) and remote inhibit (INH) circuit provide additional shutdown protection should either the HP-IB and/or controller fail.

1-10 The fault circuit provides the user with a means of knowing the status of any unmasked fault register bit, Independently of the SRO function available through the HP-IB. In other words you do not have to rely on the controller to inform you of a fault within the power supply.

1-11 The remote inhibit line; which is also independent of the HP-IB, provides a way to disable the supply remotely (i.e. a "panic button"). In other words you have a means to bypass the controller and/or HP-IB to disable the supply.

1-12 SAFETY CONSIDERATIONS

1-13 This product is a Safety Class 1 instrument (provided with a protective earth terminal). The instrument and this manual should be reviewed for safety markings and instructions before operation. Refer to the Sefety Summary page at the beginning of this manual for e summery of generel safety informetion. Sefety informetion for specific procedures is located at appropriate places in this menual.

1-14 SPECIFICATIONS

1-15 Instrument specifications are listed in Table 1-1. These specifications are the peformance standards or limits against which the instrument is tested. Supplemental information is also listed in Table 1-1, including typical but non-warranted characteristics.

1-16 OPTIONS

1-17 Options are standard factory modifications or

accessories that are delivered with the instrument. The following options are available with the HP 6038A. Note lower output power specifications for Option 100, which is described in Appendix A. Control Interface Intermediate Language (CIIL) programming capabilities (Option 700) are described in Appendix E.

Option	Description
001	Blank Front Panel for line Options 120, 220, and 240 Vdc
100	Input power: 100 Vac +6%, −10%; 48-63 Hz single phase. Output power: 150 W, 60 V, 10 A.
120	Input power: 120 Vac +6% −13%; 48-63 Hz single phase.
220	Input power: 220 Vac +6%, −13%; 48-63 Hz, single phase.
240	Input power: 240 Vac +6%, −13%; 48-63 Hz, single phase.
800	Rack mount Kit for two units side by side.
908	Single side rack mounting kit with half-module width extension adaptor. Note front handle kit (HP P/N 5061-9690) is not compatible with Option 908.
910	One additional Operating and Service Manual for each Option 910 ordered.
700	Control Interface Intermediate Language (CIIL)
W30	Extended Warranty

1-18 ACCESSORIES

1-19 The System-II cabinet accessories and service accessories listed below may be ordered with the power supply or separately from your local Hewlett-Packard Sales and Service Office (see list of addresses at rear of this manual).

HP Part No.	Description
5061-9660	Rack mounting adapter kit for side mounting one 7-inch high cabinet, includes one rack flange and one half-module width extension adapter. (Will be shipped with instrument if ordered as Option 908). Note rack mounting adapter kit (HP P/N 5061-9660) is not compatible with front handle kit (HP P/N 5061-9690)
5061-9661	Rack mounting adapter kit for center mounting one 7-inch high cabinet, includes one rack flange and one quarter-module width extension adapter (two kits required), there will be surplus of hardware.
5061-9678	Rack flange kit for 7-inch high cabinet. Must be used with another half-module width unit of equal depth with lock link kit 5061-9694. (Will be shipped if instrument is ordered as Option 800).
5061-9694	Lock link kit for joining units of equal depth, contains hardware for three side-by-side joints (four units) and two over-under joints (three units). Locking cabinets together horizontally in a configuration wider than one full module is not recommended. 5061-9678 and 5061-9694 will be shipped if Option 800 is ordered.
5061-9690	Front handle kit for 7-inch high cabinets. Corresponding flange kit is 5061-2072. Note front handle kit (HP P/N 5061-9690) is not compatible with rack mounting adapter kit (HP P/N 5061-9660) or Option 908.
5061-2072	Flange kit to be used with front handle kit 5061-9690.
5061-9684	Rack mounting flange kit with handles for 7-inch high cabinet. Must be used with another half-module width unit of equal depth with lock link kit 5061-9694.
5061-9703	Bail handle kit for carrying 7-inch high, half-module width cabinet.
1460-1345	Tilt stand (1) snaps into standard foot on instrument, must be used in pairs.
5061-9698	Support shelf bit for mounting one or more 7-inch high cabinets of any depth to 20 inches.
5061-9727	Front filler panel, half-module width, for 7-inch high cabinet on support shelf.
1494-0065	Slide kit for 5061-0098 support shelf.
06033-60005	Service kit, includes extenders for control and power mesh boards, three cables to allow HP-IB and PSI boards to lie on table outside unit, and control board test connector.
5060-0138	HP-IB connector non-metric to metric conversion kit.
5060-2860	FET service kit, includes FETs and all components that should be replaced with FETs.

1-20 INSTRUMENT AND MANUAL IDENTIFICATION

1-21 Hewlett-Packard power supplies are identified by a two-part serial number. The first part is the serial number prefix, a number-letter combination that denotes the date of a significant design change and the country of manufacture. The first two digits indicate the year (24 = 1984, 25 = 1985, etc), the second two digits indicate the week, and "A" designates the U.S.A. The second part of the serial number is a different sequential number assigned to each power supply, starting with 00101.

1-22 If the serial number on your instrument does not agree with those on the title page of this manual, a yellow Manual Changes sheet supplied with the manual defines the difference

between your instrument and the instrument described by this manual. The change sheet may also contain information for correcting errors in the manual.

1-23 HP-IB INTERCONNECTION CABLES AND CONNECTORS

1-24 Cables for interconnecting HP-IB devices are available in four different lengths. The connector block at both ends of each HP-IB cable has a plug on one side end a matching receptacle on the other, so that several cables mey be connected in perellel, thus simplifying system interconnection. Lock screws provide secure mounting of eech connector block to en HP-IB instrument, or to enother ceble connector block. All connectors supplied since 1975 use metric hardwere (colored black). Accessories table lists kit for converting one non-metric (colored silver) cable and one or two instruments to metric hardware. The 10833 series of cables features improved shielding, compared to the older 10631 series, to help improve overall RFI levels in many systems. The 10631 and 10833 series cables are functionally compatible with one another, but the 10631 series cables will interrupt the continuity of the 10833 series shielding.

Model	
10833A	HP-IB Cable, 1 m (3.3 ft.)
10833B	HP-IB Cable, 2 m (6.6 ft.)
10833C	HP-IB Cable, 4 m (13.2 ft.)
10833D	HP-IB Cable, 0.5 m (1.6 ft.)
10834A	HP-IB Connector Extender

1-25 The 10834A extender was designed to help in cases where rear panel space results in difficult cabling situations. The extender provides clearance by extending the first connector block 2.3 cm away from the rear panel of the instrument.

1-26 ORDERING ADDITIONAL MANUALS

1-27 One manual is shipped with each power supply. Additional manuals may be purchased directly from your local Hewlett-Packard Sales office. Specify the model number instrument serial number prefix, and the manual part number provided on the title page. (When ordered at the same time as the power supply, additional manuals may be puchased by adding Option 910 to the order and specifying the number of additional manuals desired).

1-28 RELATED DOCUMENTS

1-29 The following documents may be useful for designing HP-IB systems. The HP documents can be ordered from your local HP Sales Office.

Programming Note, Introductory Operating Guide, HP System Power Supplies, HP Part Number 5952-4131

Progremming Note, Quick Reference Guide, HP System Power Supplies, HP Part Number 5952-4130.

Condensed Description of the Hewlett-Peckerd Interfece Bus, HP Pert Number 59401-90030, Merch, 1975, 18 pages.

Tutorial Description of the Hewlett-Packard Interface Bus, HP Pert Number 59300-90007, November, 1980, 92 pages.

IEEE Std 488-1978 Digital Interface for Programmable Instrumentation, corrected edition July 25, 1980, or later, available from:

IEEE
345 East 47th Street
New York NY 10017

1-30 HP-IB COMPATABILITY

1-31 The 6038A implements the following HP-IB interface functions:

SH1 (Source Handshake)
AH1 (Acceptor Handshake)
T6 (Talker)
L4 (Listener)
SR1 (Service Request)
RL1 (Remote Local)
PP1 (Parallel Poll)
DC1 (Device Clear)
DT1 (Device Trigger)

Table 1-1. Specifications and Supplemental Characteristics

All performance specifications ere at rear terminals with a resistive load. All specificetions apply over the full opereting temperatue range unless otherwise specified. **AC Input** Two internal switches and one internal jumper permite operation from 120, 220, or 240 Vac (−13%, +6%, 48-63Hz). 100 Vac operation is a factory set option only. **Input Current:** 100 Vac: 6.0 A 120 Vac: 6.5 A 220 Vac: 3.8 A 240 Vac: 3.6 A 850 VA Maximum 375 W Maximum	**Input Fuse Ratings:** The AC input is protected by e rear panel mounted fuse: 8 A for 100 Vac and 120 Vac, 4 A for 220 Vac end 240 Vec. **Peak Inrush Current:** 20 A maximum at any line or temperture. **DC Output** Voltage and current can be programmed vai HP-IB, front panel control or remote analog control over the following ranges: Voltage: 0 to 60 V Current: 0 to 10 A See graph and table for maximu output power.

Table 1-1. Specifications and Supplemental Characteristics (continued)

OUTPUT BOUNDARY SPECIFICATION

Voltage (V)	Current (A)	Power (W)	Current (A)	Voltage (V)	Power (W)
20	10.0	200	3.3	60	200
25	8.5	212	4.0	54	216
30	7.6	228	5.0	46	232
35	6.7	234	6.0	40	240
40	6.0	240	7.0	34	238
45	5.3	237	8.0	29	232
50	4.6	232	9.0	24	217
55	4.1	226	10.0	20	200
60	3.3	200			

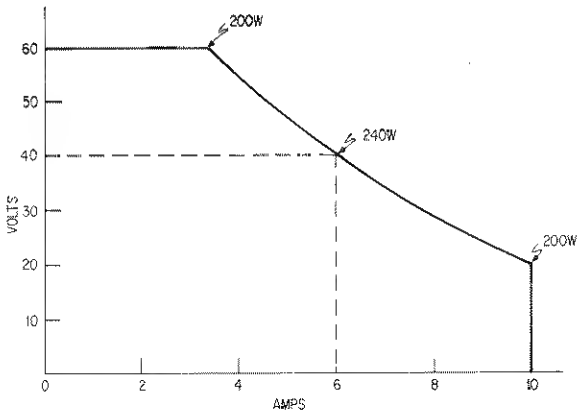

Load Effect

For a load change equal to the maximum available current rating of the supply at the set voltage (CV) or maximum available voltage rating at the set current (CC):

Voltage: 0.01% +3 mV
Current: 0.01% +5 mA

Source Effect

For a line change within rating:

Voltage: 0.01% +2 mV
Current: 0.01% +2 mA

DC Output Isolation

Either output terminal may be floated up to ±240 Vdc (including output voltage) from aarth ground.

PARD (Ripple and Noise)

RMS/pk-pk 20Hz-20 MHz:

Voltage: 3 mV/30 mV
Current: 5 mA
Common mode current: 1 mA/40 mA typical

Temperature Coefficient:

Change in output per °C after a 30-minute warmup.

Voltage: 50 ppm +3 mV
Current: 90 ppm +0.3 mA

Drift (Stability)

Change in output over an 8-hr interval under constant line, load and ambient temperature after 30-minute warmup.

Voltage: 0.02% +2 mV
Current: 0.03% +3 mA

Load Transient Recovery Time

The time required for the output voltage to recover within a band around the nominal voltage following a 10% or 50% change in load current.

10% load current change: 1 ms to within 75 mV
50% load current change: 2 ms to within 200 mV

Output Imepdance (Typical)

See graph:

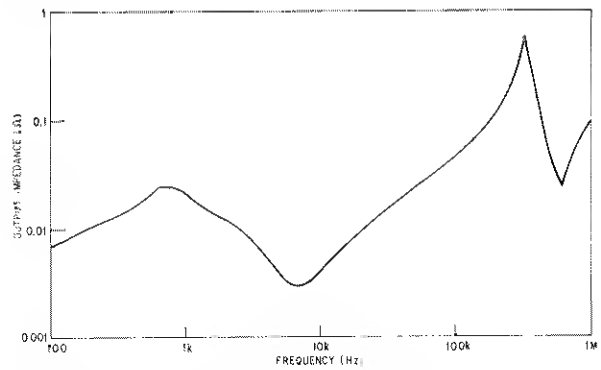

Programming Resolution

Voltage: 15 mV
Current: 2.5 mA

Programming Accuracy (25 ±5 °C)

Voltage: 0.035% +40 mV
Current: 0.085% +10 mA

Both channels are monotonic over the operating temperature range.

Programming Response Time

Maximum time for output voltage to change from 0 to 60 V or 60 V to 2 V and settle within 15 mV of final value.

Up:	Full load (18 ohms)	225 ms
	Light load (400 ohms)	225 ms
	No load	225 ms
Down:	Full load (18 ohms)	400 ms
	Light load (400 ohms)	750 ms
	No load	1500 ms

Typical programming response time data for changes other than full-scale excursions:

	full load 18 ohms	light load 400 ohms	no load
Up: 0 - 60 V	150 ms	120 ms	120 ms
0 - 30 V	120 ms	100 ms	100 ms
20 - 60 V	120 ms	100 ms	100 ms
Down: 60 - 2 V	150 ms	400 ms	850 ms
60 - 10 V	110 ms	210 ms	350 ms
60 - 30 V	160 ms	340 ms	500 ms

Table 1-1. Specifications end Supplemental Characteristics (continued)

Typical output voltage overshoot:

Final velue	Ovarshoot
<3 V	3 V
>3 V	0.1 V

Readbeck (25 ±5 °C)

Voltage Resolution: 15 mV
Accuracy: 0.07% +50 mV
TC: 30 ppm +1 mV /°C

Current Resolution: 2.5 mA
Accuracy: 0.20% +11 mA
TC: 70 ppm +0.5 mA /°C

OVP Resolution: 37.5 mV
Accuracy: 0.25% +300 mV
TC: 100 ppm +5 mV

Front Panel Meters (25 ±5 °C)

VOLTS

Range	Resolution	Accuracy
2 V	15 mV	0.07% +50 mV
20 V	15 mV	0.07% +55 mV
200 V	100 mV	0.07% +100 mV

TC: Same as voltage readback

AMPS

Range	Resolution	Accuracy
20 A	10 mA	0.20% +11 mA

TC: Same as current readback

OVP
Range: 200 V
Resolution: 100 mV
Accuracy: 0.3% +300 mV
TC: Same as OVP readback

Multiple Oprations

Up to two HP 6038A units may be connected in series or auto-parallel, to provide increased output capabilities. Note mixing supplies with dis-similar output capabilities is not recommended; because under certein conditions, the lower output unit may be stressed beyond it's maximum voltage end/or current capabilities by the higher output unit.

Ovarvoltega Protection

Trip voltege edjustable vie front panel control.

OVP
Range: 0-63 V
Resolution: 100 mV
Accuracy: 0.25% +300 mV (Set using DISPLAY function)
TC: 100 ppm +5 mV/°C

Minimum setting above output voltage to avoid nuisance tripping is 1.5 V.

Remote Analog Programming (25 ±5 °C)

Resistance programming:

0 to 4 k provides zero to maximum rated output voltage or current. The resulting scele factor is 1 ohm/LSB for a 12-bit system, which corresponds to 200 ohms/volt and 133 ohms/amp.

Voltage:
Accuracy: 0.42% +30 mV
TC: 50 ppm +3 mV

Current:
Accuracy: 0.8% +20 mA
TC: 100 ppm +0.3 mA

Voltege programming:

0 to 5 V provides zero to maximum rated output voltage or current.

Voltage:
Accuracy: 0.25% +30 mV
TC: 10 ppm +3 mV

Current:
Accuracy: 0.15% +20 mA
TC: 70 ppm +0.3 mA

The programming inputs are protected against input voltages up to ±40 V.

FAULT (FLT))terminels 1 and 2)

(Iol) low level output current = +1.25 mA max.
(Vol) low level output voltage = 0.5 V max.

INHIBIT (INH) (terminals 3 and 4).

(Vih) high level input voltage = 2 V min.
(Vil) low level input voltage = 0.5 V max.
(tw) Pluse width = 50 ms min.
(td) Delay time = 50 ms max. (2.0 ms typ.)
(Iil) low level input current = 1.25 mA max.

ABSOLUTE MAXIMUM RATINGS:

between FLT terminals (terminals 1 and 2): +17.5 Vdc max.
between INH terminal (terminals 3 and 4): +5.5 Vdc max.
between terminals 1 or 2 to pin 4 or chassis gound: ±42 Vdc.

Voltage and Current Monitor Outputs (25 ±5 °C)

0 to 5 V output indicetes zero to meximum rated output. All eccurecy specifications are referred to the output of the supply.

Voltage:
Accuracy: 0.25% +10 mV
TC: 10 ppm +2 mV /°C
Output impedance: 10.2 k Ωohm ±5%

Current:
Accuracy: 0.15% +6 mA
TC: 70 ppm +0.3 mA/°C
Output impedance: 10.2 k Ω ±5%

Table 1-1. Specifications and Supplemental Characteristics (continued)

Remote Sensing Meets load-effect specification at load by correcting for load-lead drop of up to 0.5 V per lead with sense wire resistance of less than 0.2 ohms per sense lead and lead lengths of less than 5 metres. Operation with up to 2V drop per load lead is possible; load-effect specification depends on sense-wire resistance. Refer to Section III. **Reverse Voltage Protection** Maximum permissible current caused by reverse voltege impressed across output terminals: 10 A with AC power on 10 A with AC power off **Temperature Ratings** Operating: 0 to +55°C Storage: −40 to +75°C	**Certification** Unit complies with the following requirements: IEC 348-Safety Requirements for Electronic Measuring Apparatus. CSA 5568-Electronic Instruments and Scientific Apparatus for Special Use and Applications. VDE 0411-Electronic Measuring Instruments and Automatic Controls. VDE 0871/6.78 level 8- RFI Suppression **Dimensions:** See Figure 2-1 **Weight** Net: 9.6 kg (21 lb) Shipping: 11.4 kg (25 lb)

Section II
INSTALLATION

2-1 INTRODUCTION

2-2 This section contains instructions for checking and repecking the unit, bench or reck mounting, connecting the unit to ec input power, and converting the unit from one line voltaga to enother if raquired. Instructions for connecting load and HP-IB cables, end for setting the HP-IB eddress are given in Section III.

2-3 INITIAL INSPECTION

2-4 Before shipment, this instrument was inspected and found to be free of mechanical and electrical defects. As soon as the instrument is unpacked, inspect for any damage that may have occurred in transit. Save all packing materials until the inspection is completed. If damage is found, file claim with carrier immediately. The Hewlett-Packard Sales and Service office should be notified as soon as possible.

2-5 Mechanical Check

2-6 This check should confirm that there ere no broken knobs or connectors, that the cabinet and panel surfaces are free of dents and scratches, and that the meter face and reer-penel terminal block covers ere not scratched or cracked.

2-7 Electrical Check

2-8 Section V contains complete verification procedures for this instrument. Section III contains an abbreviated check which can be used quickly to place the unit into operation. Refer to the inside front cover of the manual for Certification and Warranty statements.

2-9 PREPARATION FOR USE

2-10 In order to be put into service, the power supply must be connected to an appropriate ac input power source. Also,

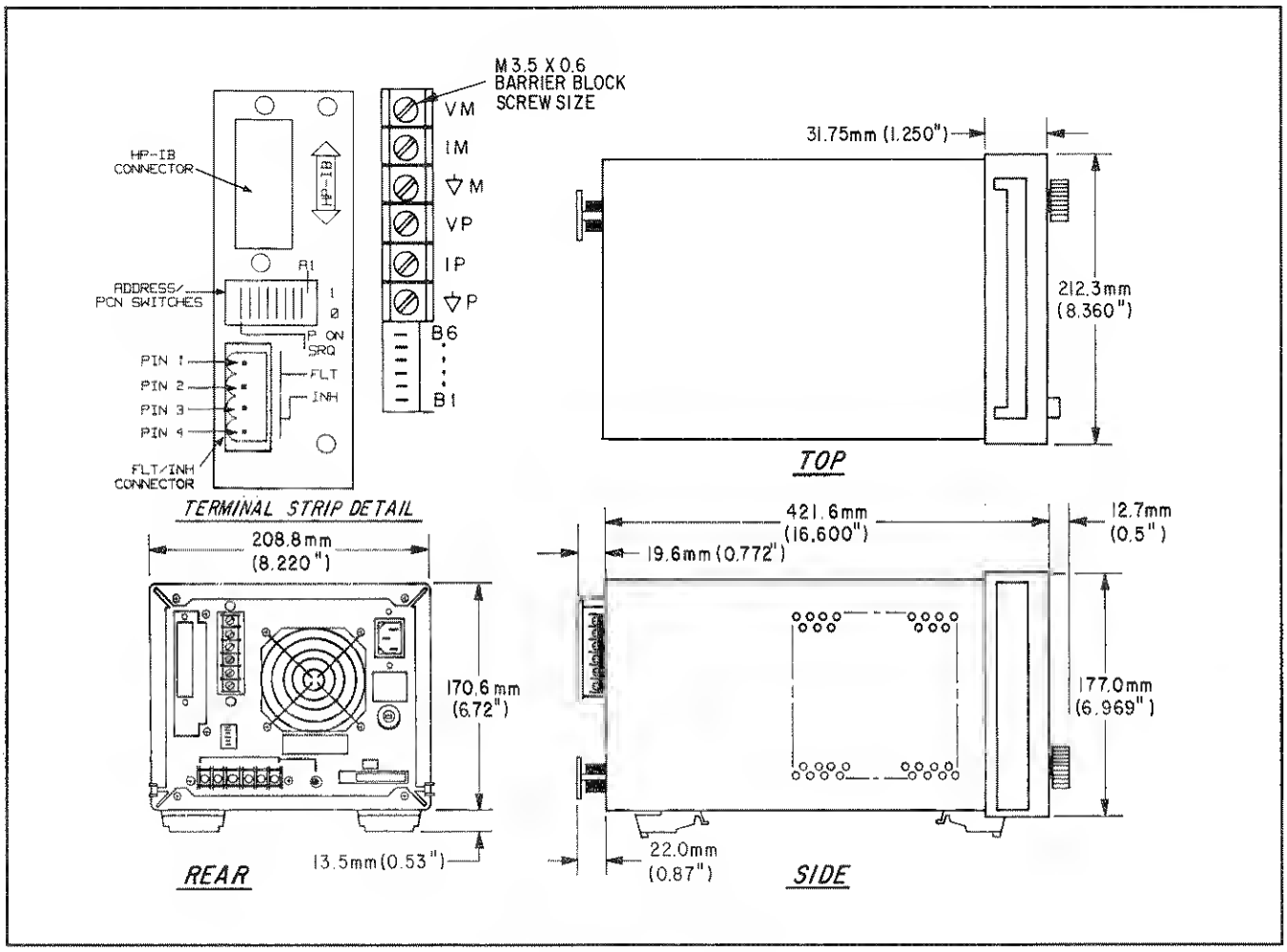

Figure 2-1. Outline Diagram

the line voltage for which the unit is set and the reer-panel fuse must be checked. Additional steps may include line voltage conversion and rack mounting. Do not apply power to the instrument before reading paragraph 2-19.

2-11 Location and Cooling

2-12 The instrument is fan cooled and must be installed with sufficient space in the rear and on sides for air flow. Either side (but not both) may be restricted to have es little as 1/4 inch (6mm) space. It should be used in an area where the ambient temperature, measured at the fan inteke, does not exceed +55°C.

2-13 Outline Diagram

2-14 Figure 2-1 illustrates the outline shape and dimensions of the cabinet.

2-15 Bench Operation

2-16 The instrument cabinet has plastic feet, which are shaped to ensure self aligning when stacked with other Hewlett-Packard System II cabinets.

2-17 Rack Mounting

2-18 The unit can be mounted in a standard 19-inch rack panel or enclosure. Rack mounting eccessories for this unit are listed in the ACCESSORIES paragraph in Section I. Complete installation instructions are included with each rack mounting kit.

2-19 Input Power Requirements

2-20 This supply may be operated from a nominal 100 V, 120 V, 220 V or 240 V single-phase ac power source (48-63 Hz). The input voltage range and input current required for each of the nominal inputs are listed below. The maximum input power (at high line, full load) required for any input is 375 watts. A label on the rear panel indicates the nominal line voltage for which the instrument was set at the factory. If necessary, the user can convert the instrument from one line voltage option to enother by following the instructions in Paragraph 2-25.

Nominal Voltage	Line Voltage Range	Maximum Input Current
100 V	87-106	6.0 A rms
120 V	104-127	6.5 A rms
220 V	191-233	3.8 A rms
240 V	208-250	3.6 A rms

2-21 Power Cable

2-22 The power supply is shipped from the factory with a power-cord plug appropriate for the user's location. Figure 2-2 illustrates the standard configuration of power-cord plugs used by Hewlett-Packard. With each drawing is the HP Part Number for a replacement power cord equipped with a plug

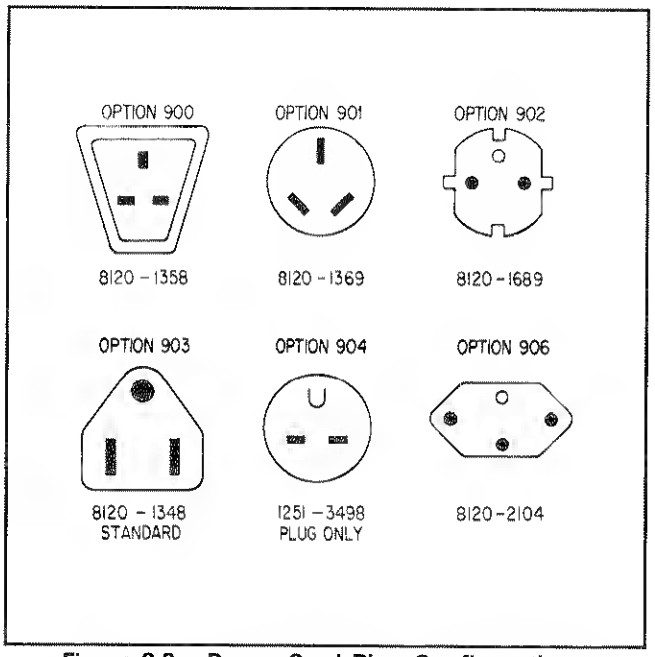

Figure 2-2. Power-Cord Plug Configurations

of that configuration. If a different power cord is required, contect the nearest Hewlett-Packard Sales and Service office.

2-23 To protect operating personnel, the National Electrical Manufacturers Association (NEMA) recommends that the instrument panel and cabinet be grounded. This instrument is equipped with a three-conductor power cable; the third conductor is the ground conductor. When the cable is plugged into an appropriate receptacle the instrument is grounded. In no event shall this instrument be operated without an adequate cabinet ground connection.

2-24 The offset pin on the standard power cable three-prong connector is the ground connection. If a two-contact receptacle is encountered, it must be replaced with a properly grounded three-contact receptacle in accordance with the National Electrical Code, local codes and ordinances. The work should be done by a qualified electrician.

NOTE

Generally, it is good practice to keep the ac input lines separated from signal lines.

2-25 LINE VOLTAGE OPTION CONVERSION

CAUTION

Conversion to or from 100 V operation requires recalibration and replacement of internal components in addition to the line voltage components, and is to be done only at the factory. Failure to reconfigure and recalibrate the power supply may result in damage to the unit.

2-26 Line voltage conversion is accomplished by adjusting three components; the two-section line select switch A1S2, line-voltage jumper A1W5, and rear-panel line fuse F1. To convert the supply from one line voltage option to another, proceed as follows:

WARNING

Some components and circuits are at ac line voltage aven with the switch off. To avoid electric shock hazard, disconnect line cord and load before removing cover.

a. Remove top cover from instrument by removing two screws that secure cover to rear panel; remove only rear screw on carrying handle; slide cover to rear and lift off.

b. The line voltage select switch is located in the front left corner of the instrument (see Figure 2-3). Use a small-blade screwdriver to set the two switch sections to match the pattern silkscreened on p.c. main board as shown in Figure 2-3. For example, to set switches for 120 V operation (as illustrated), move forward switch section so that its white slot is toward front of instrument and move rearward switch section so its white slot is toward rear of instrument.

c. One end of A1W5 is soldered to motherboard; the other end has a female right-angle quick-connect terminal that fits onto one of two terminals soldered to motherboard. For 100 V or 120 V operation, A1W5 must be connected to terminal closer to center of instrument; for 220 V or 240 V operation, A1W5 must be connected to terminal closer to side of instrument. Be certain that jumper is firmly mated with terminal on motherboard. Do not grip jumper insulation with pliers; either grip jumper wire by hand or grip jumper terminal with pliers.

d. Check rating of fuse F1 installed in rear-panel fuseholder and replace with correct value if necessary. Do not use slow-blow fuses. For 120 V operation, use 8 A fuse, HP Part Number 2110-0383. For 220 V or 240 V operation, use 4A fuse, HP Part Number 2110-0055.

e. Replace covers and mark the supply clearly with a tag or label indicating correct line voltage and fuse to be used.

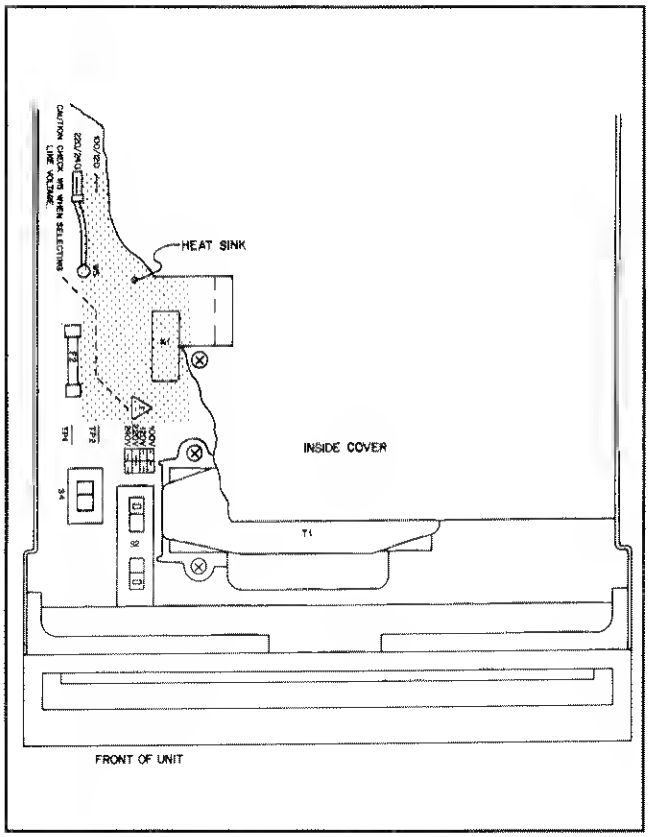

Figure 2-3. Line Voltage Selection Components

2-27 REPACKAGING FOR SHIPMENT

2-28 To insure safe shipment of the instrument, it is recommended that the package designed for the instrument be used. The original packaging material is reusable. If it is not available, contact your local Hewlett-Packard Sales and Service office to obtain the materials. This office will also furnish the address of the nearest service office to which the instrument can be shipped. Be sure to attach a tag to the instrument specifying the owner, model number, full serial number, and service required or a brief description of the trouble.

Section III
OPERATING INSTRUCTIONS

3-1 INTRODUCTION

3-2 This section describes the operating controls and indicators, turn-on chackout procedures, and operating procaduras and considerationa for the HP 6038A. Local (front-panel) and remota (via HP-IB) oparation ara described separately, but the user should bacome familiar with both methods of operation. Information in this saction through peragraph 3-64 applies to both local and remote operation. Programming examples for specific Hewlett-Packard computers are given in the Introductory Operating Guide, HP P/N 5952-4131. The Quick Reference Guide, HP P/N 5952-4130, is useful for operators who are already familiar with the operation of the HP 6038A power supply. More theoretical descriptions regarding the operational features of power supplies in general are given in the DC Power Supply Handbook, Application Note 90B (available at no charge from your local Hewlett-Packard Sales Office).

Control Interface Intermediate Language (CIIL) programming is described in Appendix E at the rear of this manual.

WARNING

Before the instrument is turned on, all protective earth terminals, extension cords, and devices connected to the power supply should be connected to a protective earth ground. Any interruption of the protective earth grounding will cause a potential shock hazard that could result in personal injury. For continued protection against fire hazard, use only a 250 Vac fuse with required current rating. Do not use slow-blow fuses. Do not use short circuited fuseholders. To do so could cause a fire and shock hazard.

3-3 CONTROLS AND INDICATORS

3-4 The front-panel controls and indicators are shown in Figura 3-1 and described in Table 3-1. Teble 3-1 also lists tha paragraphs in which usa of tha controls and indicators is dascribed.

3-5 OUTPUT RANGE FOR AN AUTORANGING POWER SUPPLY

3-6 The HP 6038A can operate as a constant voltage (CV) or constant current (CC) source over a wide range of output voltage and current combinations. The specifications table contains a graph showing the overall output range of the power supply. Figure 3-2 shows a rectangular operating locus that is defined by voltage and current settings of the power supply. The point on that locus at which the power supply actually

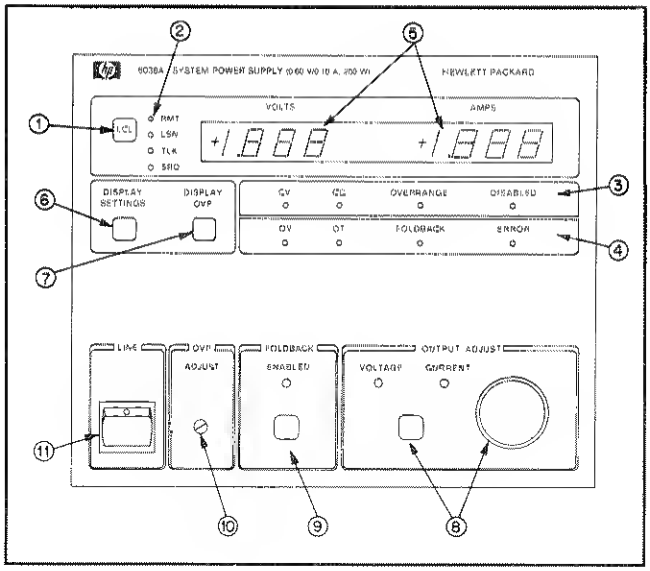

Figure 3-1. Front-Panel Controls and Indicators

operates is determined by the load resistance. Three load-resistance lines are shown on Figure 3-2. The line representing load resistance A, the highest load resistance shown on the graph, crosses the operating locus at point 1. Point 1 is on the part of the operating locus defined by the voltage setting, so the power supply operates in CV mode.

3-7 Similarly, the line representing load resistance C, the lowest load resistance shown on the graph, crosses the operating locus at point 3. Point 3 is on the part of the operating locus defined by the current setting, so the power supply operates in CC mode.

3-8 Load Resistance B equals the crossover resistanca for the particular combination of voltage and current settings shown on the graph. Either the CV or CC LED, or both, will light. If tha load resistance increasaa, the voltege setting decreesas, or the current setting increases, the power supply will oparata in CV mode. Convarsely, if the load resistance dacreases, voltage setting increases, or current decreases, tha power supply will operate in CC mode.

3-9 In Figure 3-2 the entire rectangular operating locus falls within the output range of the power supply. Figure 3-3 shows a situation in which the voltage and current settings are high enough that the rectangular operating locus is cut off by the maximum output power boundary of the power supply. For the load resistance A, the power supply operates in CV mode at the voltage and current values for point 1. Similarly, for load resistance D the power supply operates in CC mode at point 4.

Table 3-1. Controls and Indicators

Number	Controls/Indicators	Description	Paragraph
1	LCL Pushbutton	Returns unit to local control (unless local lockout has bean received via HP-IB). In local, power supply remains subject to remotely programmed soft limits and delays. When held in for ona second, LCL causes HP-IB addrass to ba displayad for up to two saconds or until LCL switch is ralaased.	3-73—3-75,3-94
2	HP-IB Status Indicators Thesa four LEDs indicata the status of the power supply on the HP-IB.	RMT (green) indicates that powar supply is under remota (HP-IB) control.	3-68, 3-74
		LSN (green) indicates that power supply is addressed to listen.	3-79
		TLK (green) indicates that power supply is addressed to talk.	3-79
		SRQ (green) indicates that power supply is requesting service from controller.	3-80—3-83
3	Power Supply Status Indicators (Primary) These four LEDs indicate the operating state of the power supply. Usually only one LED is on, but both CV and CC can be on together if unit is operating at crossover point between CV and CC.	CV (green) indicates that the power supply is regulating its output at a constant voltage.	3-17d
		CC (green) indicates that the power supply is regulating its output at a constant current.	3-17j
		OVERRANGE (yellow) indicates that the power supply is operating beyond its maximum output power specification and that the output is not regulated.	3-10—3-11,3-58
		DISABLED (yellow) indicates that the power supply output has been turned off for one of these reasons: a. command from controller b. overvoltage protection c. overtemperature protection d. foldback protection e. low or high ac input voltaga f. remote inhibit	3-59
4	Powar Supply Status Indicators (Secondary) These four LEDs indicata tha state of protective circuits within the power supply.	OV (yellow) indicates that the ovarvoltage protaction circuit has disablad tha output and is latchad.	3-17g, 3-60
		OT (yellow) inidcates that tha overtemparature protection circuit has disabled the output.	3-61
		FOLDBACK (yellow) indicates that the foldback protection circuit has disabled the output and is latched.	3-35—3-39, 3-63, 3-145
		ERROR (yellow) indicates that the power supply has detected a programming error.	3-17f,l,3-64 3-183—3-185

Table 3-1. Controls and Indicators (continued)

Number	Controls/Indicators	Description	Paragraph
		If user attempts to exceed soft limits locally (using RPG), ERROR will light while RPG is being rotated and will remain on for approximately 1 second after rotation stops. For remote programming arror, ERROR will turn off when error query is received.	
5	Numeric Display	Two 3-1/2 digit alphanumeric displays with automatically positioned decimal point that ordinarily indicate output VOLTS and AMPS (see items 6 & 7). When power supply is turned on all segments light for approximately 1 second. During an error condition, power supply output may exceed display range; displays will indicate +OL or −OL.	3-13—3-16, 3-17b-l,3-94
6	DISPLAYS SETTINGS Pushbutton Switch	Causes numeric displays to indicate programmed voltage and current values, rather than actual output values; allows both settings to be made without the necessity of opening or shorting load.	3-17b, d, j, 3-67
7	DISPLAY OVP Pushbutton Switch	Causes VOLTS display to indicate OVP trip voltage, AMPS display is blanked; allows setting to be made without changing output settings or load connections.	3-33
8	OUTPUT ADJUST Controls	OUTPUT ADJUST knob functions either as a voltage control or a current control, as determined by the pushbutton switch and indicated by whichever (green) indicator, VOLTAGE or CURRENT, is on. Knob functions as a two-speed device; faster rotation causes greater rate of change per rotation. OUTPUT ADJUST controls operate only when unit is under local control.	3-17d-l,3-66
9	FOLDBACK Control	The pushbutton switch toggles foldback protaction on and off in local operation; has no effect if power supply is not in CV or CC (ERROR LED flashes), or in remote. Switch also resets foldback protaction circuit if it has disabled power supply output. FOLDBACK ENABLED LED (green) operates in either local or remote.	3-63,3-68e, 3-72e
10	OVP ADJUST	The recessed, single-turn screwdriver control sets the overvoltage protection trip voltage.	3-33
11	LINE Switch	Turns ac power on and off.	3-17a

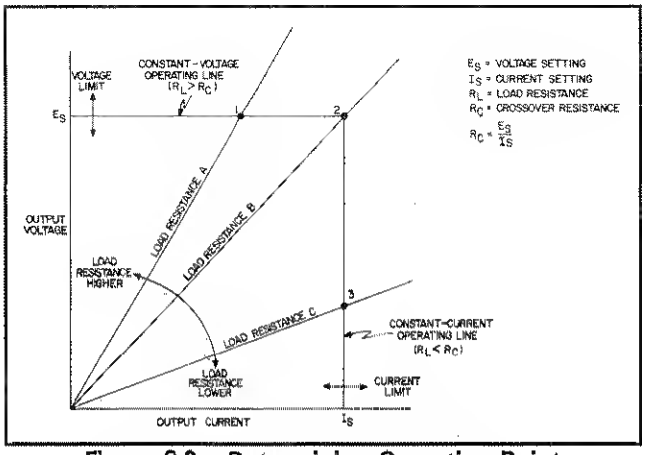

Figure 3-2. Determining Operating Point

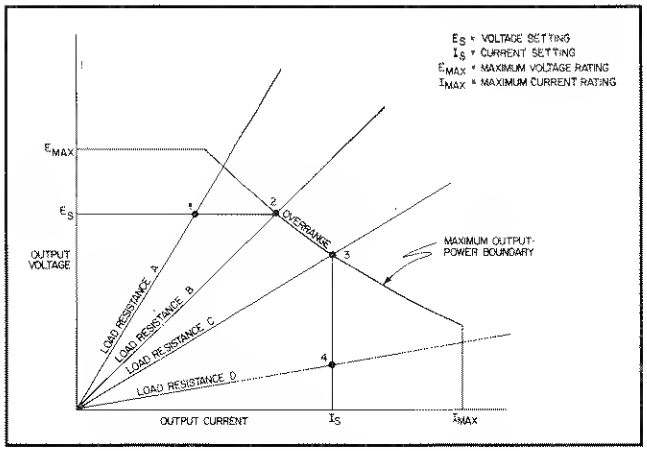

Figure 3-3. Overrenge Operetion

3-10 For load resistances between B end C, the operating point will be on the maximum output-power boundary between points 2 and 3, and the OVERANGE LED will be on. The VOLTS and AMPS displays will indicate the voltage and current being supplied to the output. (The product of the two readings will exceed rated output power of the supply.) Note that the actual boundary is beyond the specified minimum boundary. The OVERRANGE LED will light only if the actual boundary is exceeded.

3-11 The supply can operete in the overrenge region for sustained periods without being demeged. However, the supply is not guaranteed to meet specifications in overrenge. Output ripple increases substantielly end reguletion is seriously degraded.

NOTE

Under certain conditions of line and load, it is possible for the supply to provide more than rated output power and still maintain regulation. If this occurs, the unit will operate normally and the OVERRANGE indicator will be off. However, the slightest change in either line or load may cause the unit to go out of regulation. Operation of the unit beyond the rated-output-power boundary is not recommended under any circumstances.

3-12 TURN-ON CHECKOUT PROCEDURE

3-13 The power supply performs a series of self tests each time power is turned on. All front-panel LEDs, including all meter segments, are also turned on. The tests take approximately one second to complete, and all indicators remain on while the tests are running. This alerts the operator that self tests are running, and allows the operator to note if any indicators are inoperetive.

3-14 After the self tests are completed all front-panel indicators ere turned off for one-helf second, ellowing the operator to note if eny ere stuck on. If the operetor suspects that eny indicetor may be melfunctioning he should turn power off end back on egain while observing that indicetor.

3-15 Once the all-indicators-off period is over, the HP-IB address switch setting is displayed on the meter displays for one second. For example, if the address switches were set for address 5, the display would be:

Adr 5

3-16 If the unit fails any of the self tests, an error code is displayed on the meter displays. The unit will not respond to any commands, either from the front panel or HP-IB, and it should be removed for service.

NOTE

Because the power supply is testing itself, it is not possible to guarantee that the unit will provide an unambiguous indication of all possible failures. For example, a failure in the core of the microcomputer or in the hardware used to light the front-panel display may prevent the unit from indicating that it has failed a test. Refer to the troubleshooting procedures in Section V if there is any reason to suspect that the unit may be malfunctioning.

3-17 The following procedure ensures that the unit is operational, and may be used as an incoming inspection check. Refer to Section V for more extensive performance tests to determine that the unit meets specifications. Ensure that the rear-panel MODE switches are set es shown in Figure 3-4, and thet

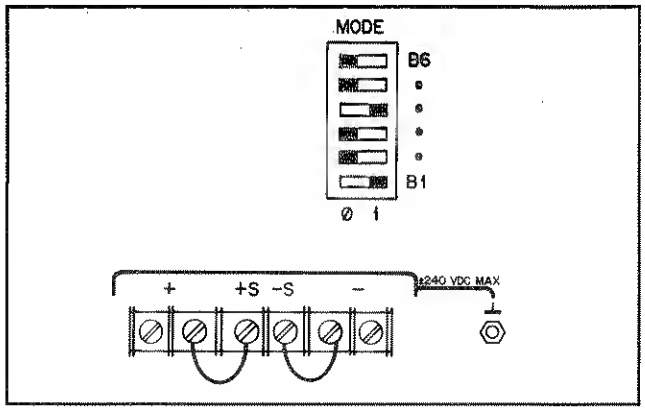

Figure 3-4. Factory Settings, Mode Switch and Sensing Leeds

the sensing jumpers are tightened securely. Check that the rear-panel label indicates that the unit is set for the line voltage to be used. There should be no cables connected to the rear panel HP-IB connector. Check that the recessed OVP ADJUST control on the front panel is fully clockwise. The HP-IB address switches may be set to any address from 0 to 30 for this procedure.

a. Press top of LINE rocker switch to turn unit on. Fan should operate. Check that display shows HP-IB address set by rear-panel switches. After address display, CURRENT indicator should remain on and either CV or CC indicator should remain on. (SRQ indicator will remain on if rear-panel PON SRQ switch has been set to 1.)

b. Press momentary-contact DISPLAY SETTINGS pushbutton switch and check that VOLTS display indicates 0.00 and AMPS display indicates 0.00.

c. Press momentary-contact DISPLAY OVP pushbutton switch and check that VOLTS display indicates 65 ±2 V.

d. Turn OUTPUT ADJUST knob clockwise, press DISPLAY SETTINGS switch, and check that AMPS setting has increased. CV indicator should be on and CC indicator should be off.

e. Press momentary-contact OUTPUT ADJUST pushbutton switch once; VOLTAGE indicator should turn on and CURRENT indicator should turn off.

f. Turn OUTPUT ADJUST knob clockwise and check that output voltage increases from zero to full output voltage as indicated on VOLTS display. Continued clockwise rotation may cause VOLTS display to indicate + OL, and ERROR indicator will light (turns off one second after clockwise rotation stops).

g. Check overvoltage protection circuit by turning OVP ADJUST control counterclockwise until OVP circuit trips. Output should drop to 0 V, CV indicator turns off, and DISABLED and OV indicators turn on (SRO and VOLTAGE indicators remain on).

h. Reset OVP circuit by turning OVP ADJUST control fully clockwise and turning unit off and back on. Output voltage should come on at 0 volts.

i. To check constant current circuit, turn power supply off and connect a wire (AWG#16, 1 mm^2 or larger) across + and − terminals on rear panel.

j. Turn power supply on and press OUTPUT ADJUST switch once to turn on VOLTAGE indicator. Turn OUTPUT ADJUST knob clockwise, press DISPLAY SETTINGS switch, and check that VOLTS setting has increased. CC indicator should be on and CV indicator should be off.

k. Press OUTPUT ADJUST switch once; CURRENT indicator should turn on and VOLTAGE indicator should turn off.

l. Turn OUTPUT ADJUST knob clockwise and check that output current increases from zero to full output current as indicated on AMPS display. Continued clockwise rotation may cause AMPS display to indicate + OL, and ERROR indicator light (turns off one second after clockwise rotation stops).

m. Turn off power supply, remove short from output, and read following instructions before connecting load to supply.

3-18 INITIAL SETUP AND INTERCONNECTIONS

WARNING

Turn off input ac power before changing any rear-panel connection and make certain all wires and straps are properly connected and terminal block screws are securely tightened before reapplying power. Be certain to replace both terminal block cover before reapplying power.

3-19 Connecting the Load

3-20 Load connections to the power supply are made at the + and − terminals on the rear panel. Two factors must be considered when selecting wire size for load connections, conductor temperature and voltage drop.

3-21 To satisfy safety requirements, the wires to the load should be at least heavy enough not to overheat while carrying the power supply output current that would flow if the load were shorted. Stranded AWG#16 copper wire 1 mm^2 cross-section area) is rated for 13.5 amps at 105°C conductor temperature. (The maximum allowable conductor temperature is based on +60°C ambient temperature plus 45°C temperature rise because of continuous dc current). This rating is based on use of a twisted pair to connect the load to the supply. If the wire insulation is rated for less than 105°C or if the wires are located such that heat build up is a factor, larger wire sizes must be used. The minimum load wire size is AWG #16 (1mm^2).

3-22 The wires must be properly terminated with connectors securely attached. Do not connect unterminated wires to the power supply.

3-23 The minimum wire size required to prevent overheating will not usually be large enough to provide a good voltage regulation at the load. For proper regulation the load wires should be large enough to limit the voltage drop to no more than 0.5 volts per lead. Table 3-2 lists resistivity for various wire sizes and the maximum lengths that may be used to limit voltage drop to 0.5 volts for various currents. Lengths are given in metres and (feet).

3-24 To determine maximum lengths (in metres or feet) for currents not listed, use the formula:

$$\text{maximum length} = \frac{500}{\text{current} \times \text{resistivity}}$$

where current is expressed in amps and resistivity is expressed in ohms/kilometer or ohms/1000 feet. If load regulation is critical, use remote voltage sensing (paragraph 3-40).

WARNING

Remember while calculating load wire size that the wire must be large enough not to overheat while carrying the current that would flow if the load were shorted.

3-25 Table 3-3 lists current-carrying capacity (ampacity) for various sizes of stranded copper wire.

3-26 The terminal blocks are protected by impact-resistant plastic covers, which are secured to the unit with two M4 x 8 screws each. Be certain to replace the covers after making connections.

3-27 If multiple loads are connected to one supply, each load should be connected to the supply's output terminals using separate pairs of connecting wires. This minimizes mutual coupling effects and takes full advantage of the supply's low output impedance. Each pair of connecting wires should be as short as possible and twisted or shielded to reduce noise pickup and radiation.

3-28 If load considerations require the use of output distribution terminals that are located remotely from the supply, then the power supply output terminals should be connected to the remote distribution terminals by a pair of twisted or shielded wires and each load should be separately connected to the remote distribution terminals. Remote voltage sensing is required under these circumstances (paragraph 3-40). Sense either at the remote distribution terminals, or (if one load is more sensitive than the others) directly at the most critical load.

Table 3-2. Maximum Wire Lengths To Limit Voltage Drops

Wire Size		Resistivity		Maximum Length In Metres (Feet) To Limit Voltage Drop To 0.5V Or Less			
AWG	Cross-Section Area In mm^2	Ω/kft	Ω/km	5A	10A	20A	30A
22		16.15		(6)	(3)	(1.5)	(1)
	0,5		40,1	2,5	1.2	0,6	0,4
20		10.16		(9.5)	(4.5)	(2)	(1.5)
	0,75		26,7	3,7	1,9	0,9	0,6
18		6.388		(15.5)	(7.5)	(3.5)	(2.5)
	1		20,0	5,0	2,5	1,3	0,8
16		4.018		(24.5)	(12)	(6)	(4)
	1,5		13,7	7,3	3,6	1,8	1,2
14		2.526		(39.5)	(19.5)	(9.5)	(6.5)
	2,5		8,21	12,2	6,1	3,0	2,0
12		1.589		(62.5)	(31)	(15.5)	(10.5)
	4		5,09	19,6	9,8	4,9	3,3
10		0.9994		(100)	(50)	(25)	(17)
	6		3,39	29	14,7	7,4	4,9
8		0.6285		(159)	(79)	(39.5)	(27)
	10		1,95	51	25	12,8	8,5
6		0.3953		(252)	(126)	(63)	(4)
	16		1,24	80	40	20	13,4
4		0.2486		(402)	(201)	(100)	(68)
	25		0,795	125	62	31	20
2		0.1564		(639)	(319)	(159)	(108)
	35		0,565	176	88	44	29
	50		0,393	254	127	63	42
0		0.09832		(1020)	(509)	(254)	(173)

Wire sizes of AWG #14 (2,5mm^2) or smaller are normally used only for sense leads.

Table 3-3. Stranded Copper Wire Ampacity

Wire Size			
AWG	Cross Section Area in mm^2	Ampacity	NOTES:
22		5.0	1. Ratings for AWG-sized wires are derived from MIL-W-5088B. Ratings for metric-sized wires are derived from IEC Publication 335-1.
20		8.33	
	0,75	10	
18		15.4	
	1	13.5	
16		19.4	2. Ampacity of aluminum wire is approximately 84% of that listed for copper wire.
	1,5	16	
14		31.2	
	2,5	25	
12		40	3. When two or more wires are bundled together, ampacity for each wire must be reduced to the following percentages:
	4	32	
10		55	
6		40	
8		75	
	10	63	2 conductors 94%
6		100	3 conductors 89%
4		135	4 conductors 83%
2		180	5 conductors 76%
0		245	
			4. Maximum temperatures: Ambient, 55°C; Conductor, 105°C

3-29 Either positive or negative voltages can be obtained from the supply by grounding one of the output terminals. It is best to avoid grounding the output at any point other than the power supply output terminals to avoid noise problems caused by common-mode current flowing through the load leads to ground. Always use two wires to connect the load to the supply regardless of where or how the system is grounded. Never ground the system at more than one point. This supply can be operated with either output terminal up to ±240 volts dc (including output voltage) from ground.

3-30 The PARD specifications in Table 1-1 apply at the power supply output terminals. However, noise spikes induced in the load leads at or near the load may affect the load although the spikes are inductively isolated from the power supply. To minimize voltage spikes at the load, connect a bypass capacitor as shown in Figure 3-5. With this setup, peak-to-peak noise at the load can actually be reduced to a level well below the value specified at the power supply output terminals.

3-31 Overvoltage Protection (OVP)

3-32 The overvoltage trip point is adjusted at the front panel. The approximate trip voltage range is from zero volts to 65 volts. When the OVP circuit trips, the power supply output is disabled and delivers no output power, and the OVP and DISABLED indicators turn on.

3-33 **Adjustment.** OVP is set by the recessed single-turn OVP ADJUST potentiometer on the front panel. Rotating the control clockwise sets the trip voltage higher. (It is set to maximum at the factory.) When adjusting the OVP trip point, the possibility of false tripping must be considered. If the trip voltage is set too close to the supply's operating voltage, a transient in the output would falsely trip the OVP. For this reason it is recommended that the OVP trip voltage be set higher than the output voltage by at least 1 volt (see NOTE following Paragraph 3-42). To adjust the OVP trip voltage, proceed as follows:

a. Turn on supply and hold DISPLAY OVP pushbutton in.
b. Insert a small-blade screwdriver through hole in front panel and adjust OVP trip voltage to desired level.

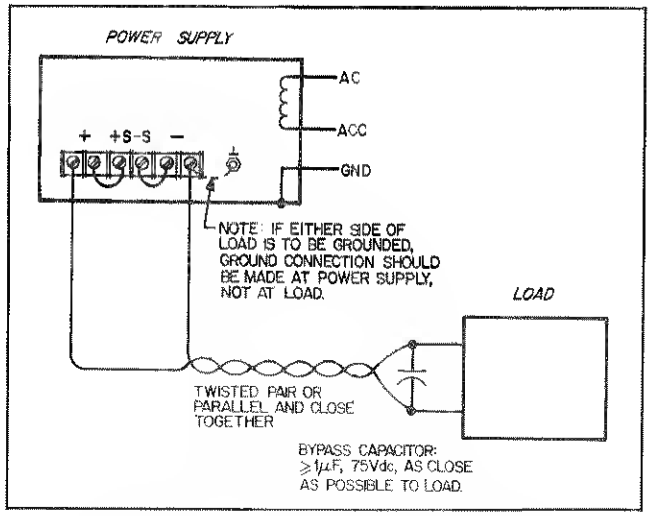

Figure 3-5. Connecting a Bypass Capacitor

3-34 **OVP Reset.** To reset OVP locally, turn the LINE switch off and then back on. OVP can also be reset via HP-IB by sending RST. The cause of the overvoltage must be removed before the OVP circuit is reset or the circuit will trip again immediately. If the OVP circuit trips continuously check the load and the trip voltage.

3-35 Foldback Protection

3-36 In some applications either CV or CC mode may be regarded es en error condition. The foldback protection feature protects sensitive loads by disabling the power supply output If the unit switches to the prohibited mode.

3-37 In local control, foldback protection is toggled on or off by the FOLDBACK pushbutton switch. The output will be disebled if the power supply switches from whichever mode (CV or CC) is in operation when foldback is enabled to the other mode. In addition to turning foldback protection on and off, the FOLDBACK pushbutton switch also resets the foldback protection circuit if it has tripped. The conditions which caused foldback should be corrected before the circuit is reset, or the foldback protection circuit will trip again after reset. To turn off foldback protection if the foldback protection circuit has tripped, press the FOLDBACK switch twice in rapid succession, once to reset the foldback protection circuit and the second time to turn off foldback protection.

3-3B The green FOLDBACK ENABLED LED lights to indicate that foldback protection is enabled; the yellow FOLDBACK LED lights to indicate that the foldback protection circuit has tripped. Note the ERROR will light if an attempt is made to turn on foldback protection while the power supply is not in CV or CC mode.

3-39 When enabled via HP-IB foldback protection can be enabled for either mode, regardless of the operating state of the power supply when the command is received.

3-40 Remote Voltage Sensing

3-41 Because of the unavoidable voltage drop developed in the load leads, the strapping pattern shown in Figure 3-4 will not provide the best possible voltage regulation at the load. The remote sensing connections shown in Figure 3-6 improve the voltage regulation at the load by monitoring the voltage there instead of et the supply's output terminals. Remote sensing ellows the power supply to autometicelly increase the output voltage end compensate for the voltage drops in the load leads. This improves the voltage regulation at the load, and is especially useful for CV operation with loads that vary and have significant load-lead resistance. Note that with remote sensing, voltage readback is at the load. Remote sensing has no effect during CC operation. When using remote sensing, turn off the power supply before changing the rear-panel straps, sense leads, or load leads. Connect the unit for remote voltage sensing by connecting load leads from +OUT and −OUT terminals to the load, disconnecting straps between +Out and +S and between −Out and −S, and connecting sense leads from the +S and -S terminals to the load as shown in Figure 3-6.

NOTE

Sensing is independent of other power supply functions; either local or remote sensing can be used regardless of how the power supply is programmed.

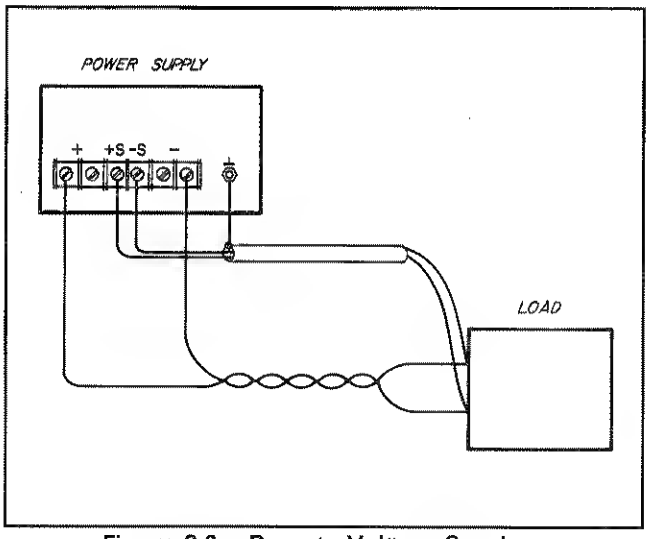

Figure 3-6. Remote Voltage Sensing

3-42 The load leads should be of the heaviest practical wire gauge, at least heavy enough to limit the voltage drop in each lead to 0.5 volts. The power supply has been designed to minimize the effects of long load-lead inductance, but best results will be obtained by using the shortest load leads practical.

NOTE

Remote voltage sensing compensates for a voltage drop of up to 0.5 V in each lead, and there may be up to a 0.12 V drop between the -output terminal and the internal sensing resistor, at which point the OVP circuit is connected. Therefore, the voltage sensed by the OVP circuit could be as much as 1.12 V more than the voltage being regulated at the load. It may be necessary to readjust the OVP trip voltage when using remote sensing.

3-43 Because the sensing leads carry only e few milliamperes, the wires used for sensing can be much lighter than the load leads. Each sense lead should have no more than 0.2 ohms resistance. Use the resistivity columns in Table 3-2 to determine the minimum wire size for the length of sense leads being used. The sense leads should be a shielded, twisted pair to minimize the pickup of external noise. Any noise picked up on the sensing leads will appear at the supply's output, and CV load regulation may be adversely affected. The shield should be grounded at the power supply end only, and should not be used as one of the sensing conductors. The sensing leads should be connected as close to the load as possible.

3-44 If slightly degraded CV load regulation can be tolerated, the power supply will provide remote voltage sensing with up to 2 Vdc drop in each load lead and with more than 0.2 ohms resistance in each sense lead. As the voltage drop in the load leads increases, the load voltage error due to sense-lead resistance increases according to the formula:

$$\frac{(2Rs + 0.5)\ VI}{1000}$$

where Rs is the resistance in ohms of each sense lead and VI is the voltage drop in each load lead. For example, if the resistance in each sense lead is 1 ohm and the voltage drop in each load lead is 2 Vdc, tha load voltage is about [2(1) +0.5]2/1000 = 1.25 mVdc less than with zero sense-lead resistance.

3-45 The sensing leads are part of the supply's programming circuits, so they should be connected in such a way as to make it unlikely that they might inadvertently become open circuited. If the sense leads open during operation, the voltage at the load may rise above its programmed value.

NOTE

The power supply includes protection resistors which reduce the effect of open sense leads during remote-sensing operation. If the +S lead opens, the output voltage increases about 4% and is sensed between the +OUT terminal and the negative side of the load. If the −S lead opens the output voltage increases about 1% and is sensed between the positive side of the load and −OUT. If both sense leads open, the output voltage increases about 4.8% and is sensed locally.

3-46 Mode Switches

3-47 Table 3-4 shows six switches on the rear panel that configure the power supply for digital programming (either HP-IB or front-panel RPG) or analog programming (resistance or voltage). (Note that front panel programming is digital; the RPG produces pulses that are monitored by the microprocessor, which then raises or lowers the digital input to the DACs that control the power supply output.) Table 3-4 shows the proper switch settings for each programming mode. When shipped from the factory the switches are set for HP-IB/front-panel-RPG programming, which is the normal operating mode for this power supply. The two analog programming modes are available for use in special circumstances.

Table 3-4. Mode Switches

Mode Switches		Programming Mode		
		HP-IB/RPG	Voltage	Resistance
CV Circuits	B6	0	0	1
	B5	0	0	0
	B4	1	0	0
CC Circuits	B3	0	0	1
	B2	0	0	0
	B1	1	0	0

3-48 Typically, only one programming mode is used for both output parameters (voltage and current). However, the mode switches allow voltage and current to be programmed independently. For example, voltage could be programmed digitally, either via HP-IB or front panel, while current is resistance programmed. Note that only one programming mode can be used for each parameter at one time. (For example, it is not permissible to superimpose an analog programming voltage on the digital programming signal. To do so could cause programming errors.)

3-49 HP-IB

3-50 Connections between the power supply and the HP-IB are made via the HP-IB connector on the rear panel. Figure 3-7 shows the signals at each of the HP-IB connector pins. The HP-IB connectors table in Section 1 lists cables and cable accessories that are available from HP. The HP-IB connector uses metric threads, which are colored black. Cables manufactured prior to 1975 have non-metric fasteners, which are colored silver. Do not attempt to mate non-metric (silver) fasteners with metric (black) fasteners (see accessories table for conversion kit).

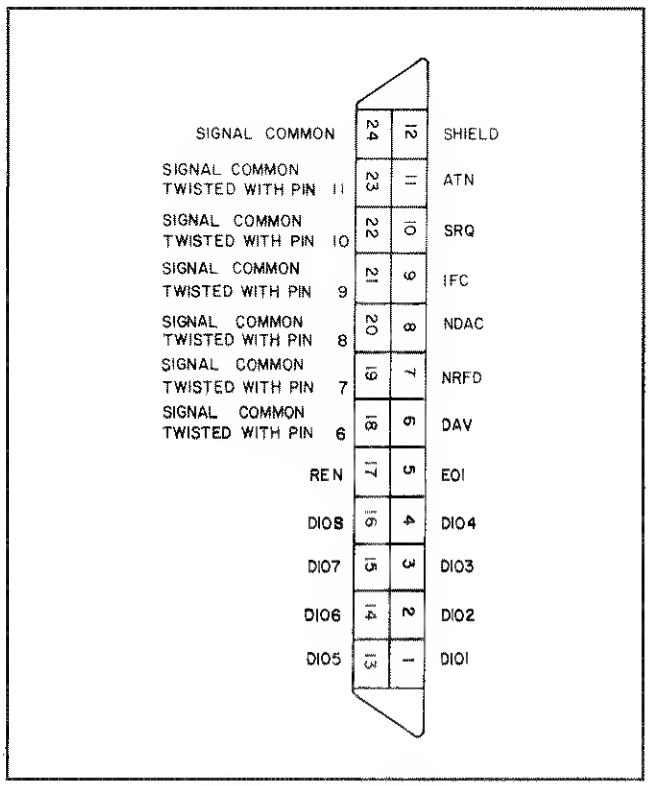

Figure 3-7. HP-IB Connector

3-51 An HP-IB system may be connected together in any configuration (star, linear or combination) as long as the

following rules are followed:

1. The total number of devices is no more than 15.
2. The total length of all the cables used is no more than two metres times the number of devices connected together, up to en absolute maximum of 20 metres. (The length between adjacent devices is not critical as long as the total accumulated cable length is no more than the maximum allowed.)

NOTE

IEEE Std 488-1978 states that caution should be taken if individual cable length exceeds 4m.

3-52 It is recommended that no more than three connector blocks be stacked together, as the resultant leverage can exert excessive force on the mounting panels. Be certain that all connectors are full seated and that the lock screws are firmly finger tightened. Do not use a screwdriver. The screwdriver slots in the lock screws are provided for removal only.

3-53 Paragraph 3-75 provides information for operating the power supply in an HP-IB system. The Tutorial Description of the Hewlett-Packard Interface Bus and other documents listed in Section 1 provide additional information that mey be helpful when designing an HP-IB system.

3-54 Monitor Signals

3-55 Amplified and buffered voltage end current monitor output signals are available at the rear-panel terminal strip. These signals can be connected to remote meters to indicate output voltage and current. The signals vary from 0 to 5 volts to indicate a zero to full-scale output. Both monitor-output terminals ere referenced to the monitor-common terminal. Output impedance of the monitor terminals is 10.2 k ± 5%; e load of 1 megohm will maintain 1% reading accuracy.

3-56 Protective Circuits

3-57 Protective circuits within the power supply may limit or turn off the output in case of abnormal conditions. The cause of the protective action cen be determined by observing the front panel indicators (lights end meters).

3-58 Overrange. If an overrange condition exists (load tries to draw more power than the supply can deliver), the OVERRANGE Indicator turns on and both the CV and CC Indicators are off. The product of the VOLTS end AMPS displays will exceed the maximum output power of the supply.

3-59 Disabled. If the power supply output is disabled, either by a command from HP-IB or by protective circuits within the power supply, or by the INH line, the power supply output drops to zero and the DISABLED indicator turns on. The power supply can be disabled by overvoltage, overtemperature, or foldback (indicated by front-panel LED's), by low or high ac line (mains) voltage, or externally via the Remote Inhibit (INH) line by command from the contoller (see Paragraph 3-141).

3-60 Overvoltage. If the voltege across the power supply output terminals rises above a preset level, possibly beceuse of a hardware malfunction, the overvoltage protection (OVP) circuit will trip. If this occurs, the power supply will be disabled and the OV indicetor turned on. To reset the OVP circuit, first ensure that the condition that caused the overvoltage is corrected. Then turn the power supply off and back on, or reset OVP via the HP-IB.

3-61 Overtemperature. If the overtemperature protection circuit trips, the power supply will be disabled end the OT indicator turned on. The overtemperature circuit will reset automatically end the power supply output will be restored when the temperature drops sufficiently for safe operation.

3-62 AC Line Over/Under Voltage. If the ac line (mains) Input voltage Increases or decreases beyond the range for safe operation the power supply output will be disabled. The power supply output will be restored when the input voltage is within range.

3-63 Foldback. If foldback protection is enabled (FOLDBACK ENABLED LED on) and the power supply switches to the prohibited mode (CV or CC), the power supply output will be disabled and the FOLDBACK indicator turned on. Press the FOLDBACK pushbutton switch to reset the foldback protection circuit and restore the power supply output. Unless the conditions (voltage setting, current setting, load resistance) that caused foldback are changed, the circuit will trip again when the output is restored. Pressing the FOLDBACK switch quickly a second time after resetting foldback will turn off foldback protection if desired.

3-64 Error. If the power supply receives an invalid commend (syntax error, out of range), either locally or via HP-IB, the ERROR indicator turns on. The power supply ignores the invalid command and remains at previously set values. If the error wes an attempt to exceed output limits using the front-penel OUTPUT ADJUST control (RPG), ERROR will turn off one second after RPG rotation stops.

3-65 LOCAL OPERATION

3-66 The power supply is configured for local operation when the unit is turned on. Output voltage and current are both set to zero, end the OUTPUT AJDUST knob is configured to adjust output current (CURRENT indicator is on). Pressing the OUTPUT ADJUST pushbutton switch alternately configures the OUTPUT ADJUST knob to adjust output voltage and current, as indicated by the VOLTAGE and CURRENT indicators. Note that the OUTPUT ADJUST knob to adjust output voltage the OUTPUT ADJUST knob will vary whichever output parameter, voltage or current, is indicated by the VOLTAGE and CURRENT indicators, even when the other parameter is limiting the output.

3-67 By pressing the DISPLAY SETTINGS pushbutton switch the operator can observe the setting (limits) of both output parameters, rather than the actual output values. This allows the operator to set the current limit when the power supply is operating in CV mode, or set the voltage limit while in CC mode, without the necessity of disconnecting or adjusting the loed.

3-68 When the power supply is under remote control (RMT indicator on), neither the VOLTAGE or CURRENT indicator is on and the OUTPUT ADJUST knob has no effect.

3-69 Constant Voltage Operation

3-70 To set up the power supply for constant voltage operation:

a. With power supply turned off, connect load to output terminals.
b. Turn on power supply. Ensure that CURRENT indicator is on, hold DISPLAY SETTINGS pushbutton switch in, and rotate OUTPUT ADJUST knob to set desired current limit.
c. Press OUTPUT ADJUST switch once so that OUTPUT ADJUST knob controls voltage, and adjust output voltage to desired level.
d. Hold in DISPLAY OVP pushbutton switch and set OVP ADJUST potentiometer for desired OVP trip voltage.
e. If foldback protection is desired, press FOLDBACK pushbutton switch to enable this feature.
f. If a load change causes the current limit to be exceeded, the power supply automatically crosses over to constant current operation and the output voltage drops proportionately. If foldback protection is enabled, mode crossover causes the power supply output to be disabled. In setting the current limit, make adequate allowance for high current peaks that could cause unwanted mode crossover.

3-71 Constant Current Operation

3-72 To set up the power supply for constant current operation:

a. With power supply turned off, connect load to output terminals.
b. Turn on power supply. Press OUTPUT ADJUST pushbutton switch once so that VOLTAGE indicator turns on, hold DISPLAY SETTINGS pushbutton switch in, and rotate OUTPUT ADJUST knob to set desired voltage limit.
c. Press OUTPUT ADJUST switch once so that OUTPUT ADJUST knob controls current, and adjust output current to desired level.
d. Hold in DISPLAY OVP pushbutton switch and set OVP ADJUST potentiometer for desired OVP trip voltage. In CC mode the voltage setting will limit output voltage under quiescent conditions, and the OVP circuit provides added protection against hardware faults.
e. If foldback protection is desired, press FOLDBACK pushbutton switch to enable this feature.
f. If a load change causes the voltage limit to be exceeded, the power supply automatically crosses over to constant voltage operation and the output current drops proportionately. If foldback protection is enabled, mode crossover causes the power supply output to be disabled. In setting the voltage limit, make adequate allowance for voltage peaks that could cause unwanted mode crossover.

3-73 Return to Local

3-74 If the power supply is under remote control (RMT indicator on) and local lockout has not been sent (see Paragraph 3-88), pressing the LCL pushbutton switch will return the unit to local (front panel) control. Holding the LCL switch in will prevent the power supply from returning to remote control for as long as the LCL switch is held in or until local lockout is sent.

3-75 If the power supply has been disabled via HP-IB, or remote inhibit (DISABLED indicator on), the LCL switch will not restore the output. The only way to re-enable the supply locally is to turn the LINE switch off and then back on. The OUTPUT ADJUST controls continue to operate in local control even if the power supply is disabled.

NOTE

Once the soft limits have been set by the controller via HP-IB, the OUTPUT ADJUST knob cannot obtain an output above these limits. This condition is true for both local and HP-IB control.

3-76 HP-IB OPERATION

3-77 Interface Functions

3-78 The power supply implements the following HP-IB interface functions, which are defined by IEEE standard 488:

SH1 (Source Handshake)
AH1 (Acceptor Handshake)
T6 (Talker)
L4 (Listener)
SR1 (Service Request)
RL1 (Remote Local)
PP1 (Parallel Poll)
DC1 (Device Clear)
DT1 (Device Trigger)

3-79 **Multiline Message Control Functions.** The Acceptor Handshake, Source Handshake, Listener, and Talker functions are implemented by the interface circuits of the power supply and the controller and require no action by the user. The LSN or TLK indicators turn on when the power supply is addressed to listen or talk. (The talker function includes serial poll, see paragraph 3-84.)

3-80 **Service Request.** Service request is a uniline message that can be asserted by the power supply to interrupt the controller. Service request can be generated by a power supply fault condition. The operator defines which of eight power supply conditions are defined as faults. Enabling or disabling a condition from asserting service request does not affect the condition within the power supply, nor does it affect the front-panel status indicators. Paragraphs 3-168 through 3-179 provide instructions for unmasking service request capability.

3-81 A service request can also be generated at power on (PON), depending on the setting of the rear-panel PON SRQ switch. Therefore, with PON SRQ enabled, if a momentary power dropout causes the power supply memory to lose its programmed values, PON alerts the operator that the power supply has been initialized (see Paragraph 3-100).

3-82 If the power supply fails self test at power on it will not respond to serial poll or any other commands on HP-IB. The user should include a time-out in his program after which the controller will not wait for the power supply to respond. If the time-out occurs, the power supply can be assumed to be malfunctioning and should be removed for service.

3-83 The SRQ indicator turns on whenever the power supply is requesting service from the controller, and remains on until the controller conducts a serial poll. Serial poll resets the SRQ bit and turns off the SRQ indicator, regardless of whether the fault that caused service request continues to exist.

3-84 **Serial Poll.** In a serial poll the controller polls each device on the bus, one at a time. The power supply responds by placing the contents of the eight-bit serial poll register on the HP-IB data lines. Table 3-5 defines each of the bits in the serial poll register and defines what causes each bit to be set and reset. Bit positions 0 through 7 are placed on DIO lines 1 through 8. Note that the serial poll register represents only the power supply connected to the HP-IB, not other power supplies that may be slaved to the HP-IB connected unit.

3-85 **Parallel Poll.** Parallel poll allows the controller to receive one bit of data from each of many or all instruments on the bus at the same time. In Hewlett-Packard power supplies this bit corresponds to bit 6, the RQS bit, of the serial poll register. Because the controller can receive this bit from at least eight instruments at one time, the controller cen determine quickly which of a number of instruments on the bus requested service. The controller can tben query that instrument to determine the cause of the service request. Perallel poll does not reset the service request bit in the power supply. The power supply's response to perellel poll can be configured remotely from the controller, or it can be configured locelly.

NOTE

IEEE-488 does not define what data an instrument should put on the bus in response to parallel poll. Many instruments, such as Hewlett-Packard power supplies, indicate the state of their RQS bit, but the operator should not assume that all instruments on the bus respond to parallel poll with their RQS bit.

Table 3-5. Serial Poll Register

Bit Position	7	6	5	4	3	2	1	0
Bit Weight	128	64	32	16	8	4	2	1
Condition	-	RQS	ERR	RDY	-	-	PON	FAU

RQS Requesting Service
ERR Remote Programming Error
RDY Ready to Process Commands
PON Power On Reset
FAU Fault Condition

RQS is set when power supply generetes e service request, and is reset immediately after a serial poll is conducted.

ERR follows ERR bit in Status Register, which is set whenever power supply detects e remote programming error. ERR is reset by ERR? query.

RDY is set whenever power supply finishes processing a command, and is reset when power supply starts to process a new command. Note that power supply input buffer can accept new commands via HP-I8 even while unit is busy processing previously received commands.

PON is set when ac input power is turned on and is reset by CLR command or Device Clear interface message. PON is set in serial poll register regardless of whether PON SRQ is enabled by rear-panel switch.

FAU is set when any bit is set in Fault Register and is reset by FAULT? query.

3-86 Unless configured remotely, the power supply responds to a parallel poll with a "1" on one of the DIO lines (if requesting service), as determined by the setting of its address switches. Addresses 0 through 7 correspond to DIO lines 1 through 8 (decimal weight 2^0 through 2^7). If the address switches ere set to 8 or higher, the power supply will not respond to a parallel poll unless the unit is configured remotely. The power supply can not return a "0" to indicate it was requesting service unless it has been configured remotely.

3-87 The power supply can be configured remotely to respond to e perellel poll with either a "1" or a "0" on one of the DIO lines if the unit is requesting eervice. Configuration statements with a decimel value of 0 through 7 will configure the unit to respond with a "0" on one of the DIO lines 1 through 8; decimal values of 8 through 15 configure the unit to respond with a "1" on one of DIO lines 1 through 8. By configuring the power supply remotely, the address switches may be set to any address from 0 through 30 without affecting the parallel poll response. The capability to configure either a "0" or "1" response allows the user to AND or OR two or more instruments on one DIO line.

3-88 **Remote/Local.** The remote/local function allows the power supply to operate in either local (front panel) or remote (via HP-I8) control. The user can send Local Lockout to the power supply via HP-IB to disable the front-panel LCL switch only. With Local Lockout, the controller determines if the unit operates in local or remote control; this enables the controller to prevent anyone else from returning the power supply to local control.

3-89 **Device Clear.** Device Clear is implemented in the power supply as Clear (see Paragraph 3-180). The difference between Clear and Device Clear is that Device Clear can be an unaddressed or addressed command. Device Clear is typically used in systems to send all devices in the system to a known state witb a single command (which could be generated by a "panic" button).

3-90 **Device Trigger.** Device Trigger is implemented in the power supply as Trigger (see Paragraph 3-153). Each device that is to respond to Device Trigger must be addressed. Device Trigger is typically used in systems to synchronize the operation of a number of addressed devices.

3-91 HP-IB Address Selection

3-92 The five HP-IB address switches are loceted on the rear panel. The HP-IB address is set in binary, with A1 the least significant bit and A5 the most significent bit. Figure 3-B shows the factory-set address of "5" (binary 00101). Any address from 00 to 30 decimal (00000 to 11110 binary) is a valid HP-IB address. The power supply will operate on whatever valid address is set on the address switches. Address 31 will cause a self-test error.

3-93 The operator should be aware that some other instruments on the HP-IB may initialize at a particular address although they can be programmed subsequently to respond to e different address. If the system includes instruments with this characteristic and they are programmed for addresses other than their initialized address, a momentary input power dropout may cause them to re-initialize their address. If another instrument, such as the power supply, is hardware set to thet address, the system will not function properly. Therefore, the system program should be written to monitor any re-initialization. Any programmed data, such as addresses, that may have been lost will then have to be reset.

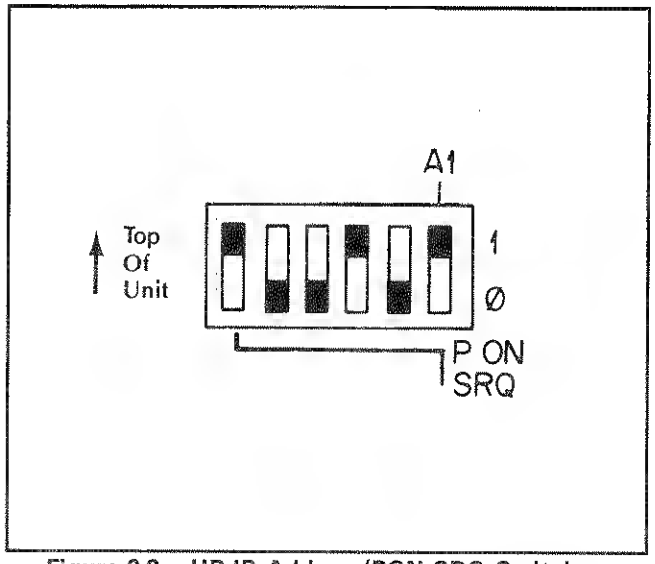

Figure 3-8. HP-IB Address/PON SRQ Switches

3-94 Holding the LCL switch in for one second causes the power supply's HP-IB address to be displayed on the front panel until the switch is released or two seconds elapse.

3-95 The address switches are also used during troubleshooting to select which self tests are run in test mode. If the power supply has been serviced be certain to check the HP-IB address switches.

3-96 Note that the leftmost switch in the six-switch package is not an HP-IB address switch. 8e careful to use the rightmost five switches for setting the HP-IB address. The following paragreph provides instructions for setting the leftmost switch.

3-97 Power-On Service Request

3-98 The power supply can request eervice from the controller when power is turnad on. Power-on service request (PON SRQ) is enabled or disabled by the rear-panel PON SRQ switch, and cannot be controlled by commands via HP-IB. The service request bit is reset by a serial poll, regardless of whether set by power-on or some other cause.

3-99 To enable power-on to request service, set the PON SRQ switch to "1", as shown in Figure 3-8. If enabled, PON SRQ will request service when the power supply is turned on or any time a momentary input power dropout causes the power supply to re-initialize.

3-100 Initial Conditions

3-101 The power supply initializes at power on programmed with the values listed in Table 3-6.

Table 3-6. Initial Conditions

Voltage	0 Volts
Current	0 Amps
OUTPUT ADJUST control	adjusts CURRENT
OVP Trip Voltage	determined by setting of OVP ADJUST potantiometar on front panal
Soft Voltage Limit	61.425 volts
Soft Currant Limit	10.2375 amps
Delay	0.5 seconds
Foldback Protection	off
Output	on
Unmask	none
Hold	off
Store/Recall	all storage registers loaded with initial conditions of unit (output on/off is not stored)

3-102 Programming Syntax

3-103 The following paragraphs describe how to program the power supply via the HP-IB. These instructions concern device-dependent messages, such as setting output voltage. Interface management messages, such as serial poll, have been described previously under Paragraph 3-77, Interface Functions.

3-104 Table 3-7 lists each of the device-dependent commands, the range of each parameter sent to the power supply or the response of the power supply to a query from the controller, and a brief description of each command. Also included is the number of the paragraph in which each command is described more fully. If no unit is specified where appropriate in data sent to the power supply, the power supply selects S.I. units (V,A,s). Paragraphs 3-105 through 3-122 provide general rules that apply to all commands.

NOTE

Lowar-casa alpha charactars sant to tha power supply are treatad as upper-case alpha characters.

3-105 **Numbers Sent to Power Supply.** Numbers can ba sent to the power supply either with implicit or explicit decimal point notation, and with or without a scale factor (scientific notation), allowing use with controllers having a wide variety of output formats.

3-106 Numbers written in implicit point notation do not contain a decimal point; for example, 123 for one hundred twenty three. Numbers written in explicit point notation contain a decimal point, such as 1.23.

3-107 In scientific notation the letter "E" stands for "10 raised to". For example, 1.23E4 would be read as 1.23 times 10^4, which equals 12,300.

3-108 Plus and minus signs are considered numeric characters. All numeric data fields may contain an optional plus or minus sign on both the number itself and the scale factor, such as +1.23E-2.

3-109 All numeric data fields may contain leading spaces, and embeddad spaces will be accepted batween optional signs and digits, digits and E, decimal point and E, and E and optional sign. The following two axamplas contain ona ambadded space in aach position in which thay ara allowad:

+ 1.23 E + 4 + 123. E + 4

Embedded spaces will not be accepted batwean digits or between digits and decimal point.

3-110 At least one digit must precade E. For example, 1E +4 is correct, E +4 is incorrect. Lower case e is treated the same as upper case E.

3-111 **Numbars Returnad To Controller.** The format of numbers returned to the controller depends upon the type of data requested, and is given in Table 3-8.

3-112 Leading zeroes are sent as spaces, except that the first digit to the left of a decimal point is never sent as a space.

3-113 All numeric data sent to the controller are preceded by a header consisting of alpha characters that identify the type of data, such as VOUT or ISET. The header consists of upper case characters only, with no embedded spaces. No suffixes are attached to numeric data.

3-114 **Separators For Data Sent To Power Supply.** Separators are used by the power supply to break up commands into pieces, called tokens, which it can interpret. Separation of commands into tokens is accomplished either explicitly by the insertion of separator characters or implicitly by noting a change from one class of input to another.

3-115 The explicit separators are commas and spaces. An explicit separator is required between tokens consisting of alpha charactars. For example, SRQ ON is correct, SRQON is not correct. Commas are usad only to separate paramatars in commands containing more than one paramater. UNMASK is tha only command for which more than one parameter may be sent. Only one comma is allowed, and it may be preceded or followed by any number of spaces. For example, both thase commands are correct:

UNMASK CC,OR,FOLD

UNMASK CC, OR, FOLD

but this command is incorrect:

UNMASK CC OR FOLD

Spaces are used in all other cases requiring explicit separators. Any number of consecutive spaces is treated as one space.

Table 3-7. HP-IB Commands

Command	*Range or **Response to Query	Description	Paragraph
VSET x VSET xV VSET xMV	*0—61.425 V *0—61425 MV	Any of these commands is used to program output voltage. Initial Condition: 0 V	3-123—3-124
ISET x ISET xA ISET xMA	*0—10.2375A *0—10237.5MA	Any of these commands is used to program output current. Initial Condition: 0 A	3-127—3-128
VSET? ISET?	**VSET xx.xxx **ISET xx.xxx	Used to read voltage and current settings.	3-125, 3-129
VOUT? IOUT?	**VOUT xx.xxx **IOUT xx.xxx	Used to measure and read output voltage or current.	3-126, 3-130
OVP?	**OVP xx.xx	Causes power supply to measure OVP setting (which is hardware set at front panel).	3-131
VMAX x VMAX xV VMAX xMV	*0—61.425V *0—61425MV	Any of these commands is used to program an upper limit (soft limit) on the voltage programming value that the power supply will accept. Initial Condition: 61.425V	3-132, 3-133
IMAX x IMAX xA IMAX xMA	*0—10.2375A *0—10237.5MA	Any of these commands is used to program an upper limit (soft limit) on the current programming value that the power supply will accept. Initial Condition: 10.2375A	3-132, 3-133
VMAX? IMAX?	**VMAX xx.xxx **IMAX xx.xxx	Used to read voltage and current limits (soft limits).	3-134
DLY x DLY xS DLY xMS	*0—31.999S *0—31999MS	Any of these commands is used to program the delay time after a new output voltage or current is Implemented, or RST or OUT ON command is received. During delay time power supply disables CV, CC, and OR conditions from baing labeled as faults, and disables foldback protection. Initial Condition: 0.5 s	3-135—3-138
DLY?	**DLY xx.xxx	Used to read delay time setting.	3-139
OUT OFF OUT 0 OUT ON OUT 1		Enables or disables power supply output. Power supply remains able to implement commands even while output is disabled. Initial Condition: OUT ON	3-141—3-143

Table 3-7. HP-IB Commands (continued)

Command	*Range or **Response to Query	Description	Paragraph
OUT?	**OUT 0 or **OUT 1	Used to read OUTPUT ON/OFF setting.	3-144
FOLD OFF FOLD 0 FOLD CV FOLD 1 FOLD CC FOLD 2		Enables or disables foldback protection, which will disable power supply output if power supply switches to whichever mode, CV or CC, is defined as the fold (error) condition. Foldback protection is inhibited during DELAY period. Initial Condition: FOLD OFF.	3-145—3-147
FOLD?	**FOLD 0 or **FOLD 1 or **FOLD 2	Used to read FOLDBACK setting.	3-148
RST		Used to reset power supply if output is disabled by overvoltage, remote inhibit, or foldback protection circuits. Power supply resets to present voltage and current settings (values can be changed while unit is disabled).	3-149—3-150
HOLD OFF HOLD 0 HOLD ON HOLD 1		Determine if certain newly received commands are implemented by power supply upon receipt or are held for later implementation while power supply continues to operate with previously received values. HOLD ON can be used to synchronize power supply changes with actions taken by other devices on the HP-IB. See TRG command. Initial Condition: HOLD OFF	3-151—3-158
HOLD?	**HOLD 0 or **HOLD 1	Used to read HOLD setting.	3-154
T TRG		Used to implement commands that have been sent to and held by the power supply (power supply continues to operate with previous values until trigger commend is received). See HOLD commend. The device trigger interfece messege performs the same function.	3-155
STO x RCL x	*0—15	Cause power supply to store and recall up to 16 sets of the complete machine state except for output on/off. Machine state consists of: programmed voltage (first and second rank), programmed current (first and second rank), soft voltage limit, soft current limit, delay time, service request on/off, foldback (first and second rank), mask (first and second rank), and hold. Initial Condition: Each storage register is initialized to the turn-on values.	3-159—3-160

Table 3-7. HP-IB Commands (continued)

Command	*Range or **Response to Query	Description	Paragraph
STS?	**STS xxx	Used to read the contents of the status register, which maintains the present status of the power supply. See Table 3-9 for e description of each bit in the status register, end the bit weight for each condition.	3-161—3-164
ASTS?	**ASTS xxx	Used to read the contents of the accumuleted-status register, which stores any bit that was entered in the stetus register since the accumulated-status register was last read, regardless of whether the condition still exists. The bit descriptions and weights are the same as in the status register, see Table 3-9.	3-165—3-167
UNMASK mnemonics UNMASK xxx		Determines which conditions are capable of setting bits in the FAULT register; therefore, allows operator to define which conditions are fault conditions. Conditions can be enabled either by sending a string of mnemonics after the command UNMASK, or by sending the decimal equivalent of the total bit weight for all conditions to be enabled. The mnemonics and bit weights are the seme as in the status register, see Table 3-9. Mnemonics are separated from each other by commas, and may be sent in any combination and in any order. The command UNMASK NONE disables all conditions from setting bits in fault register. Initial Condition: UNMASK NONE	3-168—3-172
UNMASK?	**UNMASK xxx	Used to read which bits in the status register have been enabled to set bits in the feult register (i.e.,which power supply conditions are defined as faults). xxx is decoded using bit weights in Table 3-9.	3-173
FAULT?	**FAULT xxx	Used to read which bits heve been set in the fault regieter. A bit is set in the fault register when the corresponding bit in the status register changee from inactive to ectiva AND the corresponding bit in the maek register is set. Bits in the fault register are reset only after the fault register is read. xxx is decoded using bit weights in Table 3-9.	3-174—3-175
SRO OFF SRO 0 SRO ON SRO 1		Enable or disable power supply's ability to request service from the controller for fault conditions. UNMASK command defines which power supply conditions SRO are defined as faults. Initial Condition: SRO OFF	3-176—3-177

Table 3-7. HP-IB Commands (continued)

Command	*Range or **Response to Query	Description	Paragraph
SRQ?	**SRO 0 or **SRQ 1	Used to read SRO setting.	3-178
CLR		Used to initialize power supply to power-on state; also resets the PON bit in the seriel poll register. The device clear interfece messege performs the same function.	3-180—3-182
ERR?	**ERR xx	Used to determine type of programming error detected by power supply. A remote programming error will set the ERR bit in the status register, which can be enabled by UNMASK to request service. See Table 3-10 for descriptions of error codes.	3-183—3-185
TEST?	**TEST xx	Causes power supply to run self tests and report any failures. Type of tests run depends on whether power supply output is on or off.	3-186--3-192
ID?	**HP6038A or **HP6038A, OPT 100	Causes power supply to report its model number and any options that affect the unit's output capability.	
ROM?	**ROM xxxx	Causes power supply to report the date code of HP-IB ROM.	

[Bracketed commands are equivalent.
x = any digit (within range)
MV = millivolt
MA = milliamp
MS = millisecond
** Query causes power supply to clear output buffer, gather requested data, and store it in output buffer. Data will be put on HP-IB when power supply is addressed to talk and ATN goes false. Only most recently requested data is stored, and it is not saved after being put on HP-IB.

3-116 Implicit separation occurs when the received characters change from upper or lower case alpha (A...Z, a...z) to numeric (+, –,0...9). Spaces may also be used where implicit separation takes places. For example, both the following commands ere correct:

VSET 5 V VSET5V

The question mark is implicitly seperated from alphe cheracters, for example:

VMAX? VMAX ?

are both correct.

3-117 **Terminators for Data Sent to Power Supply.** Terminators mark the end of a command string, and they instruct the power supply that the command it has just received should be executed. The terminator characters are the line feed and semicolon.

3-118 Line feed is sent by all HP controllers automatically after wrt or OUTPUT statements unless deliberately suppressed, so the user need not include a terminator when only one command is sent per line. If the user wishes to send more than one command per line the commands must be separated by semicolons.

3-119 Any numbar of consecutive terminetors is treeted es one. A terminator may be preceded or followed by eny number of speces, for exemple:

VOUT 15V;IOUT 5A

VOUT 15V ; IOUT 5A

are both correct.

3-120 The carriage return character by itself is not sufficient to terminate a command, but it will be accepted without error in all cases where a terminator or separator is expected.

Table 3-8. Format of Numbers Sent from Power Supply

For these query commands:

VSET?	ISET?	DLY?
VOUT?	IOUT?	
VMAX?	IMAX?	

the response consists of a header followed by a space* followed by 5 decimal digits with an embedded decimal point, in this format:

<header> < space > d.dddd
to
<header> space > dddd.d

The header consists of the query alpha characters without the question mark. Leading zeroes are sent as spaces, except that the first digit to the left of the decimal point is never sent as a space.

*A minus sign can be sent instead of a space for VOUT, IOUT, and OVP.

For these query commands:

STS?	FAULT?
ASTS?	ERR?
UNMASK?	TEST?

the response consists of a header followed by a space followed by three decimal digits with an implicit decimal point, in this format:

<header> <space> ddd

The header consists of the query alpha characters without the question mark. Leading zeroes are sent as spaces.

For these query commands:

FOLD?	HOLD?
OUT?	SRO?

the response consists of a header followed by a space followed by a single digit, in this format:

<header> space > d

The header consists of the query alpha characters without the question mark.

3-121 Command may also be terminated by asserting EOI on the HP-IB concurrently with the last character of the command. For example:

VSET 1.23
E
O
I

requires no semicolon or linefeed. Asserting EOI in conjunction with a terminator will heve no adverse effect.

3-122 Termination for Data Sent to Controller. All data returned to the controller are terminated by a carriage return character followed immediately by a linefeed character. EOI is asserted concurrently with linefeed.

3-123 Voltage Setting. Voltage is programmed in either volts or millivolts using any of the following codes (the value 5 is used as an example):

VSET 5

VSET 5 V

VSET 5 MV

3-124 The programmed voltage is the actual output if the power supply is in CV mode, or the voltage limit if the power supply is in CC mode.

3-125 The voltage setting may be read by sending:

VSET?

and addressing the power supply to talk.

3-126 The power supply can be instructed to measure its ectual output voltage by sending:

VOUT?

The results are placed on the HP-IB when the power supply is addressed to talk, in this format (using 20 as an example):

VOUT 20.000

NOTE

The programming resolution (LSB) for the VSET and ISET commands are 15 mV and 2.5 mA respectively. The power supply will round off settings received to the nearest multiple of these values.

3-127 Current Setting. Current is programmed in either amps or milliamps using any of the following codes (the value 10 is used as an example):

ISET 10

ISET 10A

ISET 10MA

3-128 The programmed current is the actual output if the power supply is in CC mode, or the current limit if the power supply is in CV mode.

3-129 The current setting may ba read by sending:

ISET?

and addressing the power supply to talk.

3-130 The power supply can be instructed to measure its actual output current by sending:

IOUT?

The results are placed on the HP-IB when the power supply is addressed to talk, in this format (using 10 as an example):

IOUT 10.000

3-131 OVP Measurement. OVP trip voltage is hardware set at the power supply front panel. The power supply can be instructed to measure the OVP trip voltage by sending:

OVP?

The results are placed on the HP-IB when the power supply is addressed to talk, in this format (using 60 as an example):

OVP 60.000

3-132 Soft Limits. The power supply can be sent soft limit values that place maximum limits on the voltage and current programming values that will be accepted. If the power supply receives a programming value that exceeds the soft limit, it will ignore the command, turn on the ERROR indicator, and set the ERR bits in the status register and in the serial poll register. The power supply will not accept soft limit values that are lower than present output values or values that are being held. The largest soft limit values which can be sent are 61.425 V and 10.2375 A. These values also defina the initial condition.

3-133 Soft limits are programmed using any of the following codes (the valuas 15 and 10 ara used as examples):

VMAX 15	IMAX 10
VMAX 15V	IMAX 10A
VMAX 15MV	IMAX 10MA

3-134 The soft limits may be read by sending:

VMAX?	IMAX?

and addressing the power supply to talk. The response from the power supply is in this format (using 15 and 10 as examples):

VMAX 15.000	IMAX 10.000

3-135 Delay. The power supply output may switch modes or be unregulated momentarily after a new output value is programmed or the output is reset from zero. In most cases this temporary condition would not be considered a fault, and foldback or a service request would be a nuisance. Delay operates to mask CV, CC, and OR conditions from the fault register for a specific period after a new output value is programmed. The delay is initiated after the following commands:

OUT ON

RST

T, TRG, or Device Trigger

VSET OR ISET if hold is off

3-136 The power supply initializes with a delay of 0.5 seconds, which is appropriate in most cases. In some cases a longer or shorter delay may be required. For example, when up-programming output voltage with a very low current limit, CC mode may persist longer than 0.5 seconds.

3-137 Factors that influence how long the mode change or unregulated condition may last include: difference between old output value and new output value, current or voltage limit, and output (load) capacitance (for CV mode) or output inductance (for CC mode). The delay required must be determined empirically; the programming-response times in the specifications table, Section I, can be used as guidelines.

3-138 Oelay can be programmed in 1 ms increments using either of the following codes (31999 used as an example):

OLY 31.999S

OLY 31999MS

3-139 Oelay value may be read by sending:

OLY?

and addressing the power supply to talk. The response from the power supply is in this format (using 0.5 as an example):

OLY 0.500

3-140 Note that during the delay period CV and CC are masked from the foldback protection feature also. Oelay does not affect the setting of the CV, CC, or OR bits in the status register or astatus register; delay affects only the setting of thosa bits in the fault register. Delay does not affect conditions other than CV, CC, or OR that may cause servics request, nor will delay affect CV, CC, or OR if they occur at any time other than after a programmed output change.

3-141 Output On/Off. The power supply output can be turned on and off using these commands:

OUT OFF or OUT 0

OUT ON or OUT 1

3-142 OUT OFF does not affect the voltage and current settings. OUT ON enables the power supply and returns the output to the present voltage and current settings, which can be changed while the output is off. OUT ON will not reset OVP, foldback protection, remote inhibit (INH) or fault line.

3-143 Output on/off is particularly useful when storing values for later recall. (Note that output on/off is the only programmable state that is not stored.) With the output off, the user can set up and store as many as 16 versions of the complete machine state without having the output change to a particular set of values until that setup is required.

3-144 The state of the output on/off function may be read by sending:

OUT ?

and eddressing the power supply to talk. The response from the power supply is in this formet:

OUT 0 or OUT 1

in which 0 indicetes thet the power supply output is off, end 1 indicates it is on.

3-145 Foldbeck Protection. As described in Paragraph 3-35, foldback protection can be enabled to turn off the power supply output if the power supply switches from the protected operating mode (either CV or CC) to the other mode. If the power supply changes to the specified mode, the output will be turned off and the OISABLEO and FOLOBACK indicators will turn on. To prevent nuisance tripping while the output is being reprogrammed, foldback protection is inhibited during the delay period.

3-146 Foldback protection is programmed using these codes:

FOLO OFF or FOLO 0
FOLO CV or FOLO 1
FOLO CC or FOLO 2

3-147 FOLD CV means that the power supply should be operating in CC Mode, and foldback protection will turn off the output if the power supply switches to CV mode. FOLD CC means that foldback occurs if the power supply switches to CC mode.

3-148 The state of the foldback protection function may be read by sending:

FOLO?

and addressing the power supply to talk. The response from the power supply is in this format:

FOLO 0 or FOLO1 or FOLO2

in which 0 indicates that foldback protection is off, 1 indicates that foldback protection will trip if the power supply switches to CV mode, end 2 indicetes thet foldback protection will trip if the power supply switches to CC mode.

3-149 Reset. Reset restores the power supply output if it has been disabled by OVP, foldback, or remote inhibit. The output returns to the present voltage end current settings; the values may be changed while the output is disabled. The power supply is reset with the command:

RST

3-150 Note that if the condition which caused OVP, foldbeck, or remote inhibit remains, the power supply output will be disabled egain after reset. If the power supply output is disabled repeatedly, check that the OVP setting and delay time are appropriate for the applicaion.

3-151 Hold end Trigger. The power supply contains first-rank and second-rank storage registers for values of voltage setting, current setting, foldback, and mask. The operating values are stored in the second rank, but the first rank can receive and hold different values for later implementation. With hold turned on, values in first rank are moved to second rank only upon receipt of a trigger or device trigger command.

3-152 This feature allows synchronization of multiple instruments on the HP-IB, end elso ensures that new values are implemented at the same time within a single instrument. With hold turned off, values ere loeded into both first and second renk when received.

3-153 Hold is turned on and off using these codes:

HOLO OFF or HOLO 0

HOLO ON or HOLO 1

3-154 The state of the hold on/off function may be read by sending:

HOLO?

and addressing the power supply to talk. The response from the power supply is in this format:

HOLD 0 or HOLO 1

in which 0 indicates that hold is turned off, and 1 indicates that hold is turned on.

3-155 Values that are held in first rank can be shifted to second rank (operating values) using either of these commands:

TRG or T

The device trigger interface command will also shift data from first rank to second rank.

3-156 Voltage and current values are compared to soft limits before being loaded into either first or second rank, and new soft limits are compared to values already programmed in both first and second renk. Any discrepancy between first and second rank voltage or current settings and voltage or current soft limits will result in an error condition.

3-157 The power supply has been designed to allow it to enforce sequential device command processing, which means that e second instrument on the HP-IB will not begin to receive commands until the power supply has finished processing its commands. The power supply cen eccept dete much faster then it can process date. Therefore, if e second instrument had less deta to process than the first had, the second instrument could start changing its output before the first instrument output sterted changing, even though the first instrument may have accepted ell of its data before the second instrument began to receive its data. When using device trigger (an HP-IB interface function), the HP-IB interface circuit in the power supply will not finish the handshake of the GET message (Group Execute Trigger) until all commands have been processed and the trigger action has been completed. The controller cannot send commands to a second instrument until the handshake is completed with the first. Therefore, sending device trigger after sending a command assures that the second instrument cannot begin to receive commands until the first instrument has processed its commands.

3-158 For example, assume the following commands are sent to four power supplies assigned to addresses called PS1, PS2, PS3, and PS4:

```
OUTPUT PS1; "HOLO ON; ISET 10A"
OUTPUT PS2; "HOLO ON; ISET 1A"
TRIGGER PS1
TRIGGER PS2
OUTPUT PS3; "HOLO OFF; ISET 5A"
TRIGGER PS3
OUTPUT PS4; "HOLO OFF; ISET 5A"
```

Power supply 2 will start to change only aftar power supply 1 has startad to change, and powar supply 4 will start to changa only after powar supply 3 has started to change. Nota that this feature concerns only the processing of the HP-IB command, the time required for tha power supplies to settle at their new values depends on the load and on the direction and amount of change.

3-159 Store/Recall. The power supply can store up to 16 complete power supply states except for output on/off. This allows the operator to preset frequently used values, which can then be recalled when needed with a single command. Preset values are stored and recalled using these codes (3 and 11 used as examples):

```
STO 3
RCL 11
```

3-160 Sending a store command causes a "snapshot" of the present machine state to be storad. The power supply can then be programmed with new values. Note that only those values to be changed need be reprogrammed. For example, if the following command strings were sent in listed order to the power supply, the string stored in register 1 would include a current setting of 2A and CC foldback in addition to a voltage setting of 8V. The string stored in register 2 would include a voltage setting of 8V in addition to a current setting of 10A and CV foldback. Note that the power supply output would not change while the three preset states were being stored because the output was turned off. The store/recall designators need not be assigned in consecutive ordar, but they must be in the range of 0 to 15.

```
OUT OFF
VSET 5V; ISET 2A; FOLD CC; STO 0
VSET 8V; STO 1
ISET 10A; FOLO CV; STO 2
```

3-161 Status Registar. The power supply maintains a 9 bit status registar that reflects the present state of tha unit. Each of tha nina bits represents a separate condition; when tha condition is true the corresponding bit is 1. Bits are assigned as shown in Table 3-9.

3-162 The status register can be read by sanding:

STS?

and addressing the power supply to talk. The response from the power supply is in this format:

STS xxx

where xxx is a string of ASCII decimal digits. These digits specify an integer which is equal to the sum of the bit weights of the true conditions.

3-163 For example, if bits for both ERR (128) and CC (2) are set, the power supply would send ASCII digits 1 3 0 (128 +2 = 130).

3-164 Bits remain set in the status register as long as tha corresponding conditions ara true.

Table 3-9. Status Register

Bit Position	8	7	6	5	4	3	2	1	0
Bit Weight	256	128	64	32	16	8	4	2	1
Condition	RI	ERR	FOLO	AC	OT	OV	OR	CC	CV

CV	Constant Voltage Mode
CC	Constant Current Mode
OR	Overage
OV	Overvoltage Protection Circuit Tripped
Ot	Overtemperature Protection Circuit Tripped
AC	AC Line Oropout or Out of Range
FOLO	Foldback Protection Circuit Tripped
ERR	Remote Programming Error
RI	Remote Inhibit (INH)

3-165 Accumulatad Status Registar. Reading the status register provides the controller only the state of the power supply at the time STS? was received. A condition that lasts only momentarily may not be observed even with frequent polling of the status register. To ensure that a temporary change can be noted by the controller, the power supply maintains an accumulated status (astatus) register. Table 3-9 describes the astatus register as well as the status register. A bit in the astatus register will be 1 if the corresponding bit in the status register has been 1 at any time since the astatus register was last read.

3-166 The astatus register can be read by sending:

ASTS?

and addressing tha power supply to talk. Tha responsa from tha power supply is in this format:

ASTS xxx

where xxx is dacoded the same way as in tha status register readback.

3-167 The astatus register is reset to the present value of the status register immediately after it is read by the ASTS? query.

3-168 Mask and Fault Registers. The power supply has two additional registers, the mask ragister and the fault register, both of which are arranged like the status register (Table 3-9).

The mask register is maintained by the user, and is used to specify which bits in the status register are enabled (unmasked) to set bits in the fault register. A bit is set in the fault register when the corresponding bit in the status register changes from 0 to 1 and the corresponding bit in the mask register is 1. Whenever any bit is set in the fault register the FAU bit is set in the serial poll register.

3-169 Note that bits can be set in the fault register only when there is a change in either the status register or the mask register. Therefore, if e bit ie set in the mask register (unmesked) efter the correspondlng condition becomes true in the status register, the associated bit will also be set in the fault register.

3-170 Bits may be set in the mask register (condltlons unmasked) in either of two ways. The UNMASK command may be followed by mnemonics which specify which conditions are unmasked (enabled to set bits in the fault register), or the UNMASK command may be followed by a decimal number that is the sum of the weights of the bits to be set. The mnemonics and bit weights are the same as in Table 3-9. The mnemonic NONE or decimal number 0 will clear all bits in the mask register.

3-171 8its are set in the mask register with either of the following codes (ERR/128, OR/4, and CC/2 used as examples):

UNMASK CC, OR, ERR

or

UNMASK 134

3-172 Mnemonics may be sent in any order, and they must be separated by commas. Note that the mask register does not affect the status register, it simply determines which bits in the status register can set bits in the fault register.

3-173 The mask register may be read by sending:

UNMASK?

and addressing the power supply to talk. The response from the power supply will be in this format (using 134 as an example):

UNMASK 134

3-174 The feult register may be read by sending:

FAULT?

and addressing the power supply to talk. The response from the power supply will be in this format (using 134 as an example):

FAULT 134

3-175 The fault register is cleared immediately after it is read by the FAULT? query.

3-176 Service Request. In some applications it may be desirable to interrupt the controller when a power supply fault condition occurs. The power supply interrupts the controller by asserting the service request (SRQ) line on the HP-IB. The ability to generate service requests for fault conditions can be turned on and off using the following commands:

SRO OFF or SRO 0

SRQ ON or SRQ 1

3-177 The service request function allows use of either polling or interrupt programming. With SRQ on, the SRQ line will be asserted true whenever the FAU bit in the serial poll register changes from 0 to 1. Therefore, the mesk register, in addition to specifying which conditions set the FAU bit, also determines which conditions can generete eervice requeste. Use of the FAULT? query will tell the user which condition caused tha servica request (except for PON).

3-178 The state of the service request on/off function may be read by sending:

SRQ?

and addressing the power supply to talk. The response from the power supply is in this format:

SRO 0 or SRO 1

in which 0 indicates that service request capability is disabled, and 1 indicates it is enabled.

3-179 Note that service request capabillty for power on is controlled by the rear-panel PON SRQ switch, the setting of which will not be indicated in response to an SRO? query.

3-180 Cleer. The power supply can be returned to its power-on state with the command:

CLR

or by sending a device clear interface command. Clear is typically used to initialize the power supply to a known state at the beginning of a program. Clear also resets the PON bit in the serial poll register.

3-181 The clear command does not complete until the power supply control circuits have had time to settle. This prevents perturbations on the power supply output, regardless of the state before the clear command was sent. The clear command takes about 500 me to axecute.

3-182 Note that stored preset etatee (as many es 16) ere not chenged by the clear command.

3-183 Error. When the power supply detects a remote programming error it sets the ERR bit in the status register, which can be unmasked to request service, and it turns on the front-panel ERROR indicator. Programming errors are usually the result of misspelled words or forgotten separators. When the power supply detects a programming error it dumps whatever portion of the command it has received and ignores all further characters until a terminator is received.

3-184 The type of error detected can be determined by sending:

ERR?

and addressing the power supply to talk. The response from the power supply is in this format:

ERR x

where x is a decimal digit from 0 to 8.

3-185 Table 3-10 lists the error codes with descriptions of each.

3-186 Test. The power supply runs a series of self tests when it is turned on, and selected tests can be run for troubleshooting (see Section V). Either of two subsets of the self tests can be run by command from the controller. Self tests can be invoked via the HP-IB by sending the command:

TEST?

3-187 The type of self tests performed depends on whether the power supply output is turned on or off. See Section V for a description of each of the self tests.

3-188 If the power supply output is disabled (OUT OFF command has been sent), the following tests are performed:

RAM Test #2
ROM Test
Real-Time Clock Test
Serializer Test
PSI Digital I/O Test
PSI DAC/ADC Test

3-189 If the power supply output is enabled (output is on), only these tests are performed:

RAM Test #2
ROM Test
Real-Time Clock Test
Serializer Test

3-190 When the power supply is addressed to talk after TEST? has been received, it responds in this format:

TEST x

where x is a decimal number from 0 to 22. See Section V for a listing of test-failure codes. TEST 0 indicates that all tests passed.

3-191 The test command does not complete until the power supply control circuits have had time to settle. This prevents perturbations on the power supply output. The test command takes about 500 ms to execute.

Table 3-10. Error Codes

Error #	Description
0	**No Errors**
1	**Unrecognized Character** — A character like ! " # was received.
2	**Improper Number** — A numeric character (+ — . 0...9) was received but the following characters did not represent a proper number. For example, + —5 V or .V or +V. Examples of errors that are not error 2 are: E+04 is error 3 because E is not a numeric character and is not used in any command; 12. 34E-01 is error 4 because it is treated as 12 followed by 3.4, and no commands have two numbers separated by spaces.
3	**Unrecognized String** — A string of consecutive alpha characters that could not be found in the table of command words was received. Cause could be a spelling error or missing separator. For example, OUTON would be seen as one word, and would be an error.
4	**Syntax Error** — A word, number, terminator, or separator was incorrectly placed. For example, ON OUT UNMASK,CC, or VOUT 5 V IOUT 5A. A syntax error will also result if more than the maximum number of parameters are specified in the UNMASK mnemonic-form command.
5	**Number Out Of Range** — A number was received that is too large for the command with which it was received, for example, VOUT 5E+5, RCL 200, or DLY 100S. Any negative number will also cause error 5. Note that soft limit errors are error 6.
6	**Attempt To Exceed Soft Limits** — An attempt was made to program a voltage or current greater than the soft limit, for example, VMAX 10 V; VSET 11 V. Note that if the programmed voltage or current is greater than the maximum rating of the supply, error 5 will result.
7	**Improper Soft Limit** — An attempt was made to program a soft limit less than the associated output value in either first or second rank. Note that if an attempt is made to program a soft limit greater than the maximum soft limit of the power supply, error 5 will result.
8	**Data Requested Without A Query Being Sent** — A query command, for example VOUT?, instructs the power supply to ready data for transmission to the controller. A query command must precede each request for data by the controller. If the controller requests data from the power supply (with an ENTER or red statement) without first having sent a query, error 8 will result.

3-192 Note that the test command in no way changes the programmed state or the output of the power supply.

CAUTION

The TEST? command software contains a bug which can affect overvoltage protection. If TEST? is sent with OUT OFF (output disabled), overvoltage protection will be disabled until the power supply receives an RST or CLR command or ac power is cycled off and back on. To restore overvoltage protection after TEST? command, be certain to send an RST or CLR command before sending the OUT ON command. RST is recommended, because CLR will reset all power supply parameters to the power-on state; RST resets only OVP.

Note that if OVP is tripped, RST or CLR will reset the OVP circuit in addition to restoring overvoltage protection.

Overvoltage protection is not affected if the power supply output has not been disabled for self test (i.e., if OUT OFF command is not send with TEST?).

3-193 **Model Identification.** The power supply model number can be determined from the controller by sending the command:

ID?

and addressing the power supply to talk. The response from the power supply will be either:

ID HP6038A
or
ID HP6038A, OPT100

with the option 100 identification indicating that the power supply has a reduced output-power capability.

3-194 ANALOG PROGRAMMING

3-195 The output voltage and/or current of the power supply can remotely programmed by an external resistance or voltage. The power supply is configured for analog programming with rear-panel slide switches; the analog programming signals are connected to rear-panel screw-on terminals.

3-196 For resistance programming, internal CV and CC current sources supply 1.5 mA currents through the programming resistors to create programming voltages for the power supply. Resistances of 0 to 4 kilohms program the output from 0 to full scale. A variable resistor can control the output over its entire range. Or, a variable resistor connected in series and/or parallel with a fixed resistor can have its control restricted to a limited portion of the output range. Alternatively, a switch can be used to select fixed values of programming resistance to obtain a set of discrete voltages or currents.

NOTE

The switching configuration used may require make-before-break contacts to avoid producing the output voltage transients caused by momentarily opening the programming terminals.

3-197 To maintain the temperature and stability specifications of the power supply, any resistors used for programming must be stable, low-noise resistors with a temperature coefficient of less than 25ppm per °C and a power rating of at least ½ watt.

3-198 Both voltage and current outputs can also be controlled by a voltage source. A voltage of 0 to 5 volts programs the output from zero to full scale. Voltage sources of more than 5 volts can be scaled down to the proper range.

3-199 Setting the power supply for analog programming of voltage and/or current disables digital programming (front-panel or HP-IB) for that parameter.

3-200 The following paragraphs discuss in greater detail the methods of remotely programming the output voltage or current using either a resistance or voltage input. Whichever method is used, the wires connecting the programming device must be shielded to reduce noise pickup. The outer shield of the cable should not be used as a conductor, and should be connected to ground at one end only.

3-201 Refer to Table 3-4 for mode-switch settings for voltage or resistance programming.

3-202 Although the following setup drawings (Figure 3-9 through 3-13) show the supply strapped for local sensing, analog programming and remote voltage sensing do not interact and may be used simultaneously.

3-203 **Constant Voltage Output, Resistance Control.** The setup shown in Figure 3-9 allows the output voltage to be varied by using an external resistor to program the power supply. A programming resistor variable from 0 to 4000 ohms produces a proportional output voltage from zero to full scale. Note that fixed resistors may be connected in series and/or parallel with the variable programming resistor to set lower and/or upper output voltage limits. The resultant programming resistance is the sum of the series/parallel resistor combination, and must be between 0 and 4000 ohms. For example, a 2000 ohm resistor connected in series with the variable programming resistor will set the lower limit for output voltage at one-half full scale.

NOTE

If the programming terminals (VP to ⏚ P) become open circuited during resistance programming, the output voltage will tend to rise above rating. The supply will not be damaged if this occurs, but the overvoltage trip point should be properly adjusted to protect the user's load.

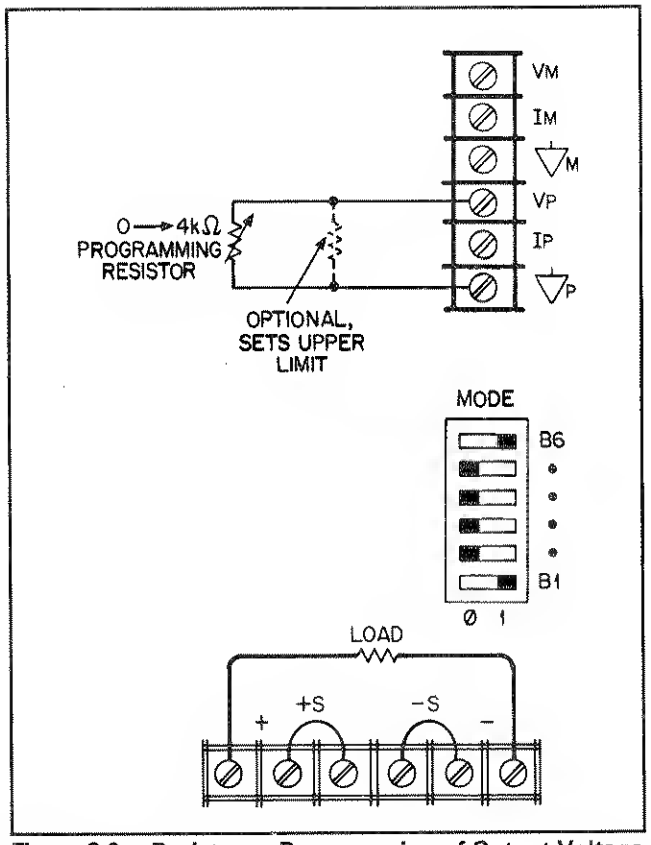

Figure 3-9. Resistance Programming of Output Voltage

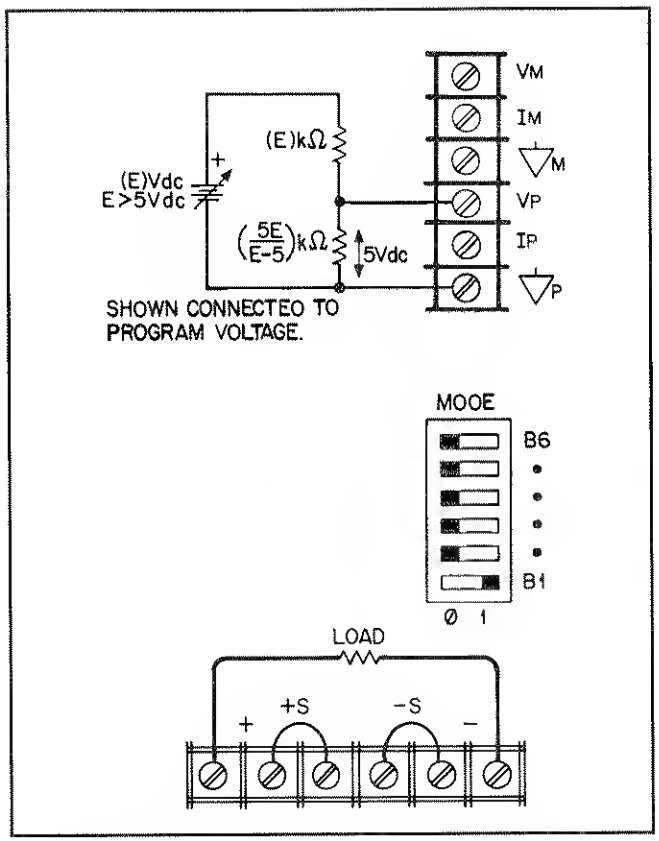

Figure 3-11. Optional Voltage Divider for Program Source

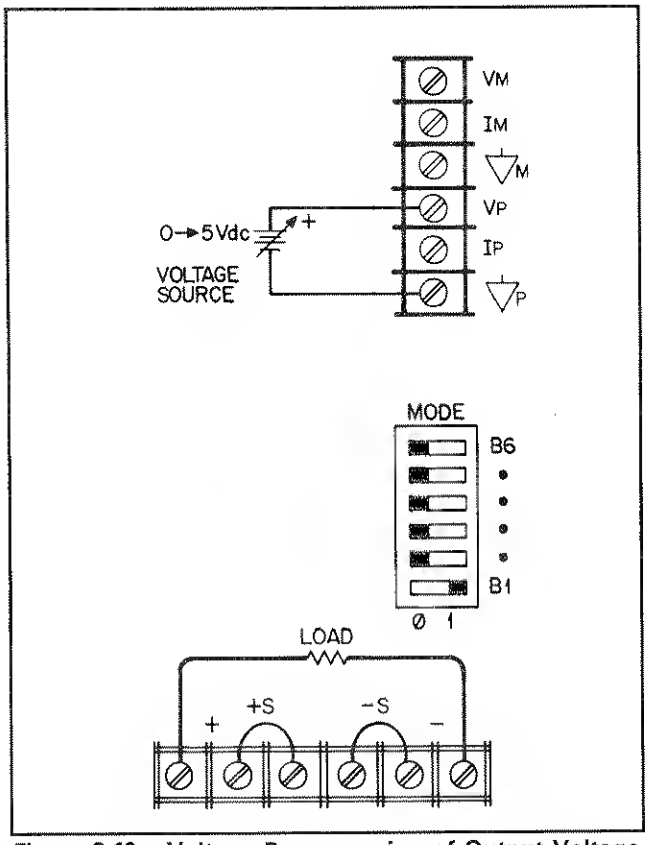

Figure 3-10. Voltage Programming of Output Voltage

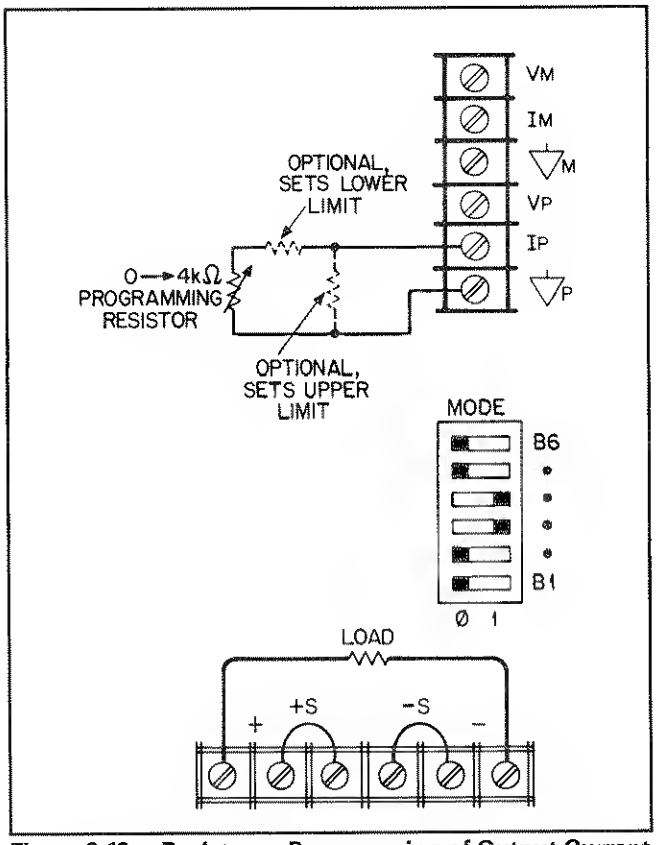

Figure 3-12. Resistence Programming of Output Currant

3-204 Constant Voltage Output, Voltage Control. The setup shown in Figure 3-10 allows the output voltage to be varied by using an external voltage source to program the supply. A voltage source variable from 0 to +5 volts produces a proportional output voltage from zero to full scale. The static load on the programming voltage source is less than 5μA. A source resistance of less than 10 k is necessary to avoid degradation of offset and drift specifications.

NOTE

If external resistors are used to limit the remote-programming voltage to 5 Vdc, the resulting high programming-source resistance can degrade the power supply's programming speed, offset and drift performance. Limit the equivalent source resistance to 10 k ohm maximum. Figure 3-11 shows a convenient way to calculate suitable voltage-divider resistance values for a 5 k ohm source resistance.

3-205 Constant Current Output, Resistance Control. The setup shown in Figure 3-12 allows the output current to be varied by using an external resistor to program the supply. The discussion in Paragraph 3-203 for constant voltage operation also applies for constant current operation.

CAUTION

If the programming terminals (IP to ⏚ P) become open circuited during resistance programming, the output current will tend to rise above rating. The power supply will not be damaged if this occurs, but the user's load may be damaged. If there is a possibility that the programming leads may be opened, it is suggested that the optional resistor be connected directly across terminals IP and ⏚P, as shown in Figure 3-12. The value of this resistor should be selected to limit the output current to the maximum that the load can handle without damage. For example, if the load can handle half the full current rating of the power supply, a 2000 ohm resistor should be connected from IP to ⏚ P. Of course, if this resistor is used, the resistance value actually programming the supply is the parallel combination of the programming resistor and the optional resistor.

3-206 Constant Current Output, Voltage Control. The setup shown in Figure 3-13 allows the output current to be varied by using an external voltage current to program the supply. The discussions in paragraphs 3-201 through 3-203 also apply for constant current operation. The note following paragraph 3-204 applies also to programming output current.

3-207 MULTIPLE-SUPPLY OPERATION

3-208 The power supply can be operated in combination with other power supplies to provide increased output capability. Connecting the outputs of two or more power supplies in series can provide an output voltage of up to 240 volts. Auto-parallel operation of two power supplies can provide output current of up to 20 amps. Other configurations are possible, contact Hewlett-Packard, New Jersey Division for specific application assistance.

3-209 Auto-Parallel Operation

3-210 Two units can be connected in an auto-parallel combination to provide twice the output current capability. One of the power supplies, the master, is programmed normally via the HP-IB. The other power supply, the slave, is analog programmed by the master. The slave may be connected to the HP-IB for readback, status, etc., but the MODE switches of the slave must be set so that the slave is analog programmed by the master.

NOTE

Proportional currents from auto-paralleled units require equal load-lead voltage drops. Connect each unit to the load using separate pairs of wire with length and gauge chosen to provide equal voltage drops from pair to pair. If this is not feasible, connect each unit to a pair of distribution terminals using equal-voltage-drop wire pairs, and then connect the distribution terminals to the load with a single pair of leads.

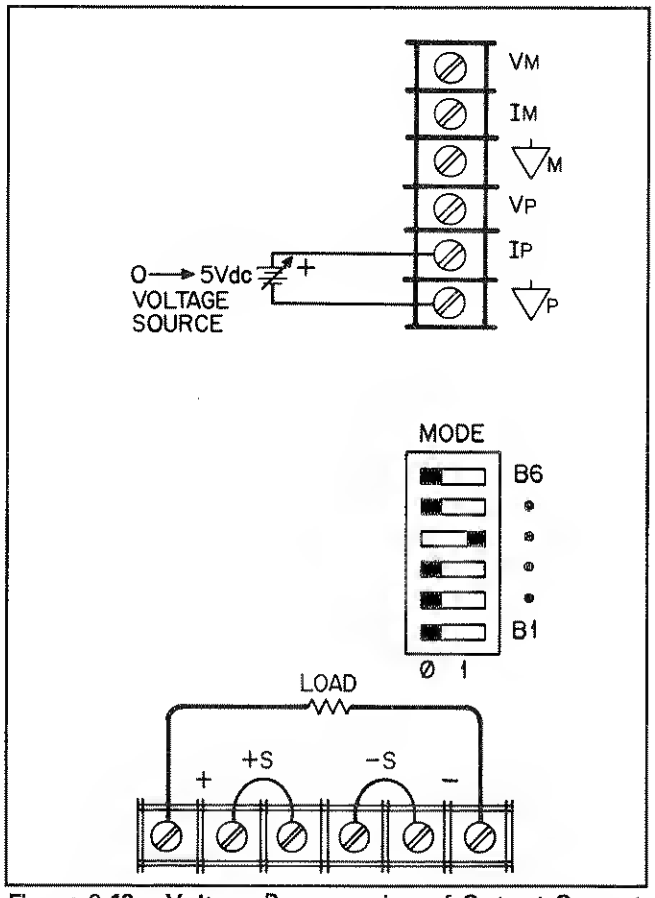

Figure 3-13. Voltage Programming of Output Current

3-211 Foldback protection, if desired, may only be used with the master power supply.

3-212 Figure 3-14 shows the rear-panel MODE switch settings and terminal connections for auto-parallel operation. This configuration provides 0 to 60 Vdc at an output current of up to 20 Adc.

3-213 **Setting Voltage and Current.** Program the slave unit's output voltage above the master's to avoid interference with master-unit CV control. The slave unit's MODE switchas disable the elave unit's current setting from having any effect in euto-parallel operation. Program the master unit to the desired output voltage and current. Verify that the slave is in CC operation.

3-214 When in CV operation, the master unit's voltage setting is the output voltage of the auto-parallel combination. The output current is the total current from all units. The fraction of total current that each unit provides is the same as the ratio of that unit's output current capability to the total output current capability of the auto-parallel combination.

3-215 In CC operation, the user must add up the current outputs from each unit and adjust the master until the total equals the desired load current.

3-216 **Overvoltage Protection.** Adjust the desired OVP shutdown limit using the master unit's OVP ADJUST control. Set the slave unit's OVP limit above the master's. When the master unit shuts down, the master programs the slave unit to zero voltage output. If a slave unit shuts down (because its OVP shutdown limit is set lower than the master's), it shuts down only itself, and the other unit supplies all the load current. The shut-down slave unit will draw some current through its down programming circuit. Tha extra current required from the master unit mey cause the master to switch from CV to CC mode.

3-217 **Ramote Sensing.** To remove sense with auto-parallel operation, connect remote-eense leeds only to the master unit according to the remote-sensing instructions in paragreph 3-40.

3-218 **Remota Programming.** To remove program with auto-parallel operation, set up only the master unit for remote programming.

NOTE

Down-programming speed is slower with auto-parallel operation because only the master unit's down programmer operates.

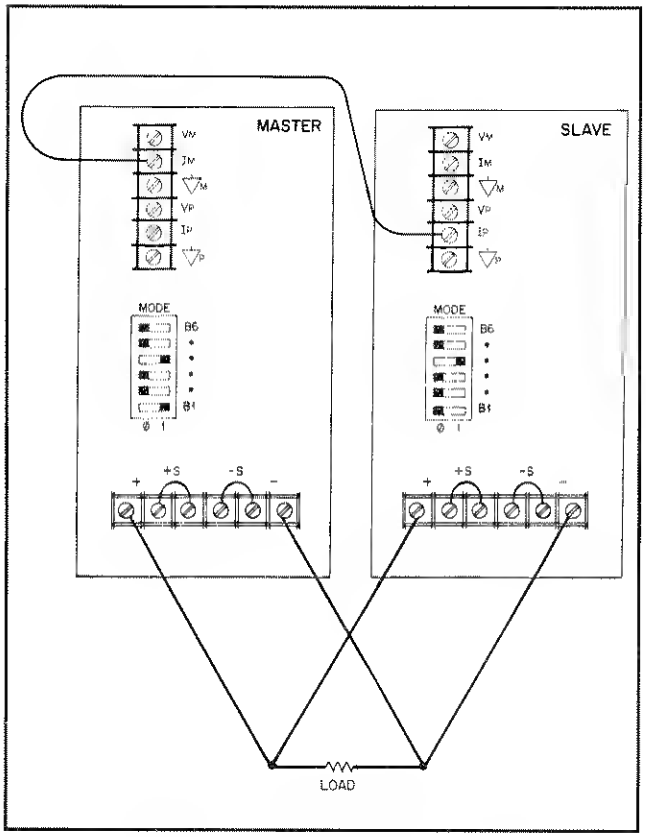

Figure 3-14. Auto-Parallel Operation

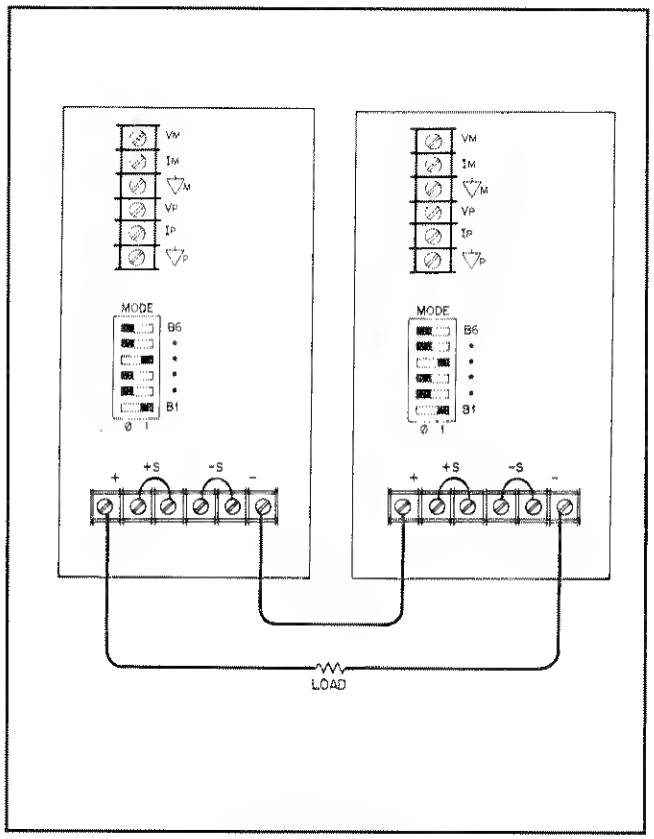

Figure 3-15. Series Operation

3-219 Series Operation

3-220 UP to two or more power supplies can have their outputs connected in series to provide increased output voltage. Each power supply is programmed via HP-IB with hold on, and then all units are tirggered at once. Multiple loads may be connected in series, and the combination may be grounded at any one point to provide both positive and negative outputs. Regardless of whether or where the load is grounded, no point may be more than +240 volts from ground. Add the voltage settings of each power supply together to determine the total output voltage. Set the current limits for each power supply to the maximum that the load can handle without damage.

3-221 Fault Input (FLT) and Remote Inhibit (INH)

3-222 The connections for FLT and INH are made through J8 which is located on the rear of the power supply just below the HP-IB address / PON selection switches. The connector (J8), is supplied with its mating plug which provides a convenient way to access the FLT and INH circuitry (see Figure 3-16). To remove the plug grip it firmly, then pull it straight out of J8. With a small screwdriver, loosen the terminal screws on the plug; connect the external FLT and/or INH circuitry, then install the plug back into the connector. Note that in order to prevent radio frequency interference (RFI), shielded or twisted peir wiring should be used for the FLT and INH connections. To prevent ground loops (if shielded wire is used) connect only one end of the shield to chassis ground. Several examples follow.

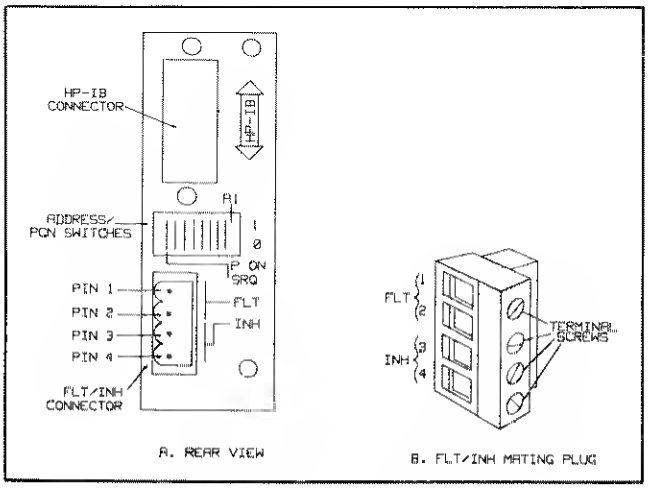

Figure 3-16. FLT/INH Connections

3-223 In Figure 3-17, an externally, normally open switch (S1) is mounted on a hinged protection hood which covers the power supply output terminals. The terminals of the switch are connected to the INH input line. When the hood is lifted, the switch closes and the following simultaneous actions are taken by the power supply:

1. The power supply is disabled (as it is when an OUT OFF or OUT 0 is isued).
2. The RI bit in the status and astatus registers is set true (1).
3. The FLT line goes true (1) (provided the RI bit in the unmasked register has been set true (1)).
4. If the RI bit in the unmesked register has been set true (1), then the RI bit in the fault register will be set true (1), and FAU bit in the serial poll register will be set true (1).

Closing the hood will not re-enable the supply, and during a serial poll the controller would be made aware that a fault exists vie the FAU bit in the seriel poll register. The fault register must now be read to reset the FLT and RI bit. Finally sending CLR will initialize the supply to its power on state (See Table 3-6).

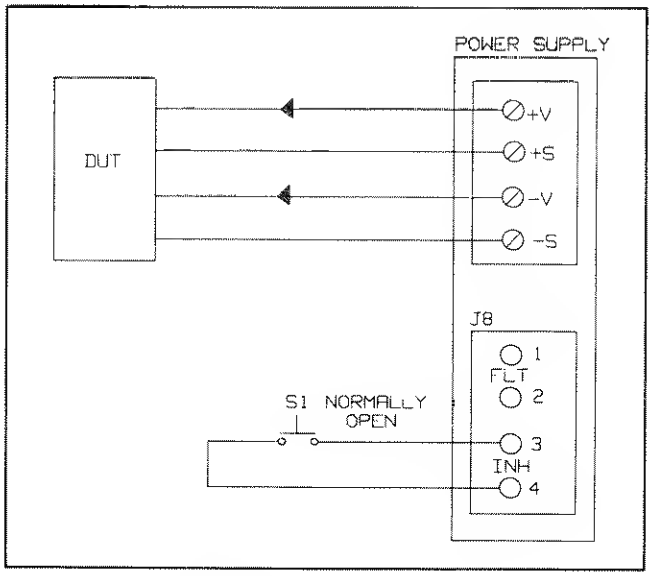

Figure 3-17. INH Example

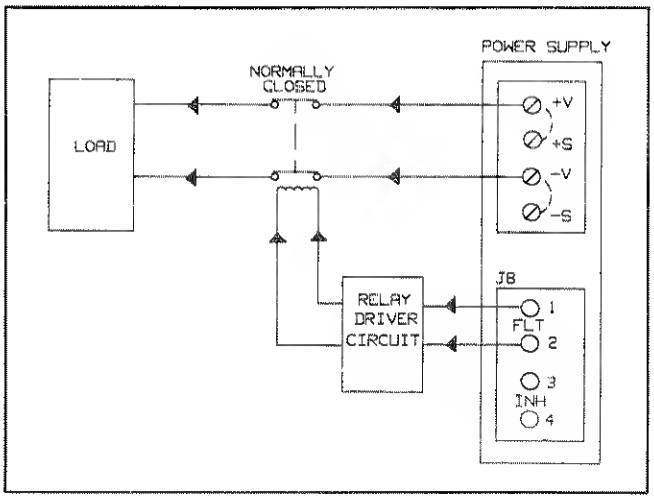

Figure 3-18. FLT Exemple

3-224 In Figure 3-18. the FLT output is used to trigger a relay driver circuit. When the driver circuit energizes the relay, the power supply is disconnected from the load. This application is useful to provide protection for the load if the controller is halted during a debugging session and a fault condition arises. Once the controller is no longer busy, the fault line can be reset by rading the fault register and the power supply can be initialized to its power on state (see Table 3-6) by sending a CLR.

3-225 The setup in Figure 3-19a chains the FLT output of one supply to the INH input of the next. In this case a fault condition in any of the supplies would cause all of the supplies to be disabled simultaneously without controller involvement or external circuitry. The controller can be made aware of the fault via a service request (SRQ). Sending a FAULT? and then a RST, will restore the output of the supply's to their programmed values before the INH circuit was tripped. Sending a CLR will initialize the supply to its power on state (see Table 3-6). To provide proper operation, correct polarity must be obseved when connecting external circuitry to the INH input. A typical example is shown in Figure 3-19b.

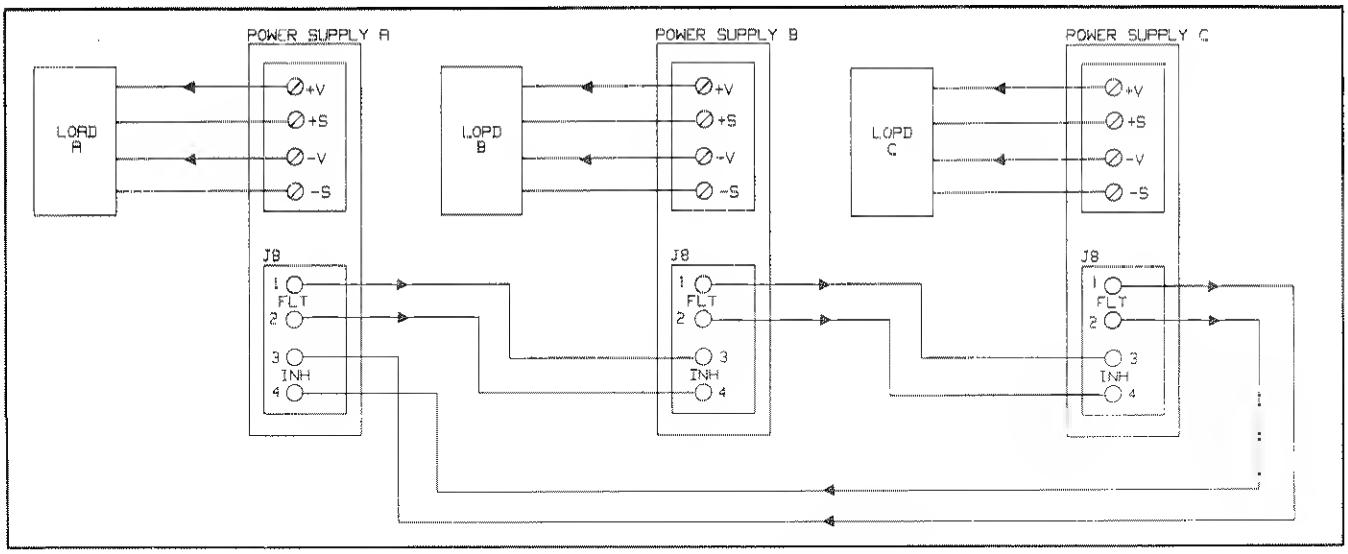

Figure 3-19a. FLT and INH with Multiple Supplies

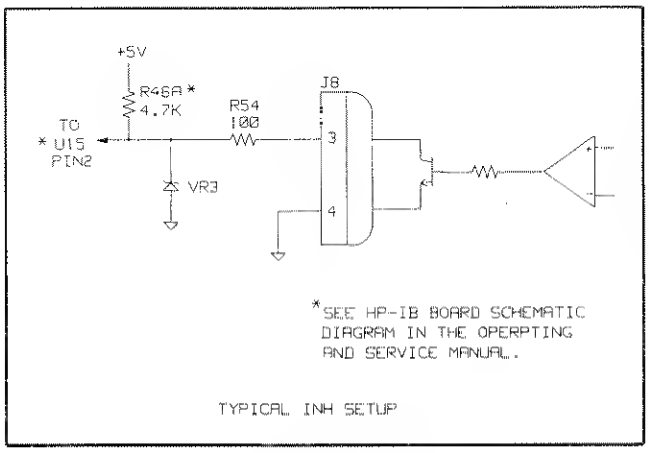

Figure 3-19b. Typical INH Setup

3-226 In Figure 3-20 the FLT output drives not only the INH input, but also triggers a sequential down programmer circuit. This would allow any supply in the system to trigger the sequential down programmer (via their FLT outputs) and disable the supplies in a predetermined order (via their INH inputs).

3-227 Timing relationships for FLT and INH are shown in Figure 3-21.

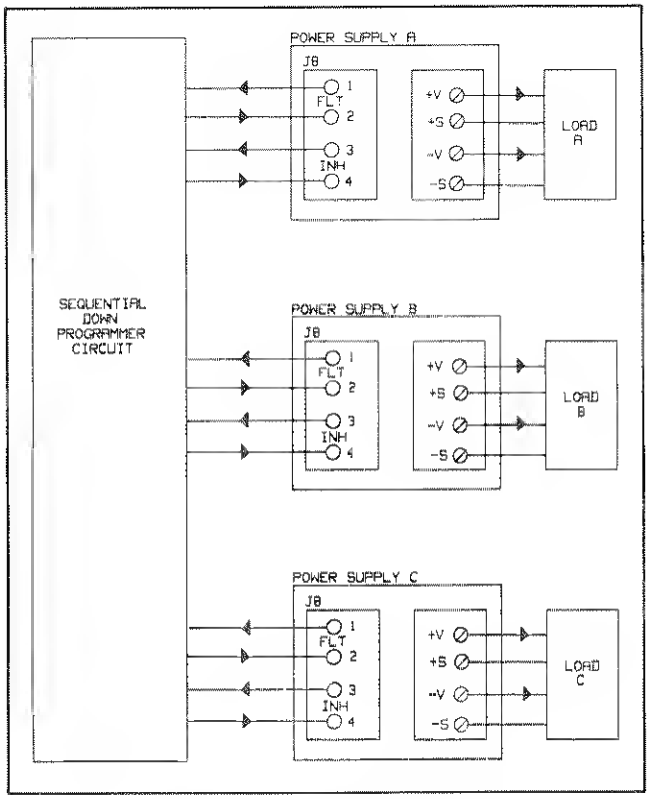

Figure 3-20. FLT and INH Example

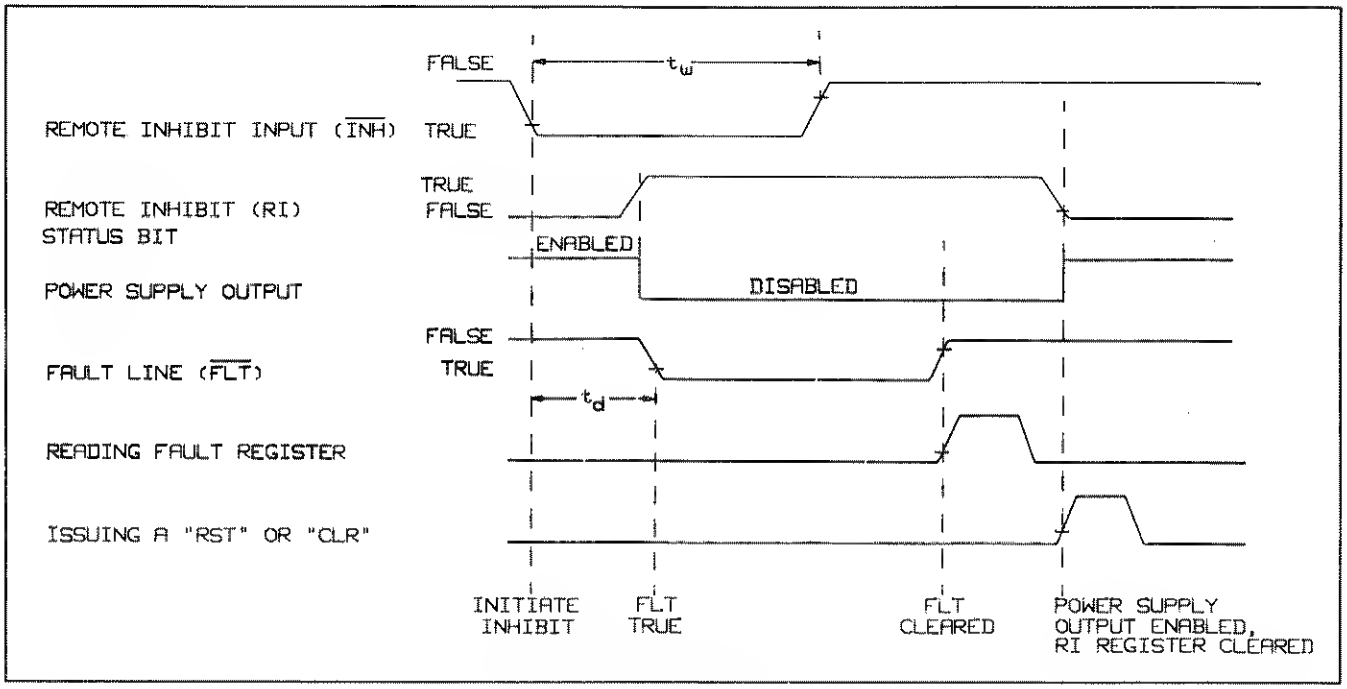

Figure 3-21. Timing Diagram